Installation and maintenance

CE 1312CR6181

THERMAL MODULE

MCHRT 250 TO 500 kW

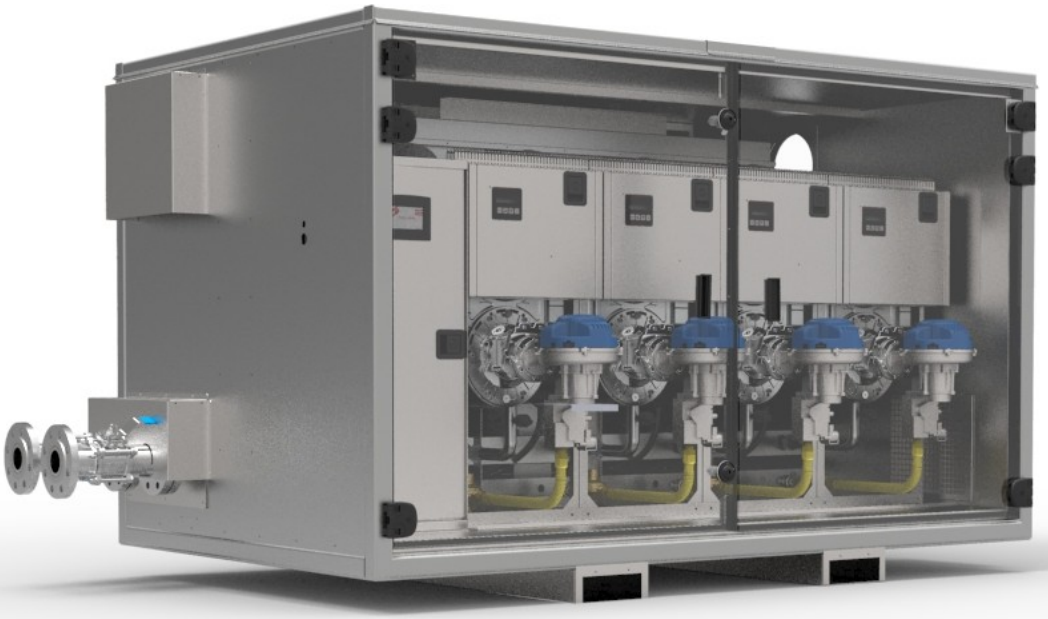

DTC MCHRT 19-200 EN

CONTENTS

Section No	Section	Page
1	WARNING AND ADVICE TO USERS	3
2	GENERAL INFORMATION 2.1 CE Marking 2.2 Liability 2.3 Receipt and storage 2.4 Guarantee 2.5 General recommendations 2.6 Installation in France 2.7 Installation in Belgium 2.8 Installation other countries	4-5
3	RECOMMENDATION FOR USE 3.1 Circuit d'eau 3.1.2 Supply 3.1.3 Preparation 3.1.4 Scaling 3.1.5 Protection of boilers from corrosion 3.1.6 Recommendations 3.1.7 De-sludger 3.2 Circuit d'air	6-8
4	INSTALLATION RECOMMENDATION	8
5	DESCRIPTION OF THE THERMAL MODULE 5.1 Description of the thermal module 5.2 Thermal module operation 5.3 Module principle diagram	9
6	TECHNICAL SPECIFICATIONS 6.1 Module performance 6.2 MCHRT 02125 module dimensions 6.3 MCHRT 03125/04125 module dimensions	10-11
7	HYDRAULIC CONNECTION 7.1 Hydraulic connection	12
8	GAS CONNECTION 8.1 Thermal module gas classification 8.2 Gas connection 8.3 Gas expansion upstream of the burners	13-14
9	CONDENSATES	15
10	SAFETY VALVE	15
11	EXHAUST GAS CONNECTION	16
12	ELECTRICITY CONNECTION 12.1 Power connection 12.2 Control and fault reporting connection 12.3 The regulation screen	17
13	REGULATION AND THE SETTINGS	18-22
14	GAS BURNER	23
15	COMMISSIONING 15.1 Electricity 15.2 Gas circuit 15.3 Condensates 15.4 Boiler room ventilation 15.5 Flue gas evacuation 15.6 Water circuit 15.7 Regulator configuration 15.8 Commissioning the installation 15.9 Boiler water flow rate 15.10 Boiler commissioning	24
16	MAINTENANCE 16.1 General inspection 16.2 Boiler irrigation check 16.3 Combustion chamber and burner check 16.4 Electrode check 16.5 Combustion check 16.6 Condensate and boiler siphon check	24-25
17	USER RECOMMENDATIONS	26
18	PARTS LIST	27-31

PLEASE READ BEFORE CONTINUING

This technical manual must be kept in good condition inside the unit.

The specifications, illustrations and descriptions contained in this document are, to the best of our knowledge, accurate at the time of their approval for printing. We reserve the right to change, discontinue certain specifications or discontinue production of a model without notice and do not make any binding commitments.

Safety rules and regulations :

It is prohibited to close off and/or reduce the premise or appliance ventilation openings.
Never close off the exhaust gas evacuation and fresh air intake.
Never alter the settings made by the qualified professional.
Never spray water on the boiler or touch the appliance with wet body parts.
Never touch the hot and/or moving parts of the boiler.
Do not place or hang any objects on the appliance.
All work on the appliance is prohibited until it has been disconnected from the power supply and the gas supply has been cut.
Do not change the type of gas used, the appliance settings, the safety or control systems, as this could create hazardous situations.
Notify the after-sales technician if there is a change of gas, gas pressure or power supply voltage.
In the event of a long period without use, disconnect the power supply from the appliance. When restarting the unit, it is advisable to use qualified personnel.

In general, any installation, repair, adjustment or maintenance work must only be carried out by authorised and qualified personnel in compliance with applicable local and national regulations.

Precautionary statement

Electric components, drive mechanisms and combustible gas can cause injury. To be able to protect against these risks:

- The power supply must be disconnected and the gas supply valve must be closed before any work is carried out on the boiler.
- After all installation, maintenance or repair work, check the gas circuit for leaks.
- Any person involved in the installation, maintenance or repair of this equipment must comply with workplace health and safety standards.

What to do if you smell gas:

- Close the external gas valve and the power supply, notify the maintenance technician.
- Do not attempt to turn the appliance back on.
- Do not use the electric switch, do not use a telephone inside the building.
- Call your gas supplier from another phone. Follow their instructions.
- If you are unable to contact them, call your fire department.

2. GENERAL INFORMATION

2.1. CE Marking

By virtue of the technical requirements it sets, the CE standard is the official recognition of the design, manufacturing and performance quality of this appliance. It complies with the essential requirements of Regulation (EU) 2016/426 "Gas appliances". It is registered under number 1312CS6264 dated 28 December 2017.

The thermal module covered by this manual complies with directives:

- Low voltage 2006/95/EC,
- Electromagnetic compatibility 2004/108/EEC,
- Ecodesign 2009/125/EC
- As required by Regulation (EU) No 813/2013 of 02 August 2013,

2.2 Liability

This Equipment must be explicitly used for the purpose for which it was designed and manufactured. YAHTEC cannot therefore be held liable for damage to persons, animals or property as a result of installation, adjustment or maintenance errors, or improper use.

This device is not intended for use by children, or persons with reduced physical, sensory or mental abilities, or persons without experience or knowledge.

YAHTEC is liable for the compliance of the device with the construction rules, directives and standards applicable at the time of marketing. The knowledge and compliance with the legal provisions and standards inherent to the location, installation, commissioning and maintenance are the sole responsibility of the installer.

2.3 Receipt and storage

The appliance is delivered on a wooden pallet protected by a plastic film. It is essential to check the condition of the delivered equipment (even if the packaging is intact) and its conformity with the order.

In the event of damage or missing parts, you must note the observations on the carrier's receipt as accurately as possible, "subject to unpacking" has no legal value, then confirm these reserves by registered letter to the carrier within 48 hours. Please remember that it is the buyer's responsibility to check the delivered goods, no claims will be possible if this procedure is not followed.

This equipment must be transported vertically and stored in a clean, dry place, protected from shocks, vibrations, temperature fluctuations and in a relative humidity level of less than 90%.

2.4 Recycling and end of product service life

This device is mainly built using materials that can be recycled, at the end of its service life, it is important to pay particular attention to its destruction. Some components, such as electric equipment, are subject to special legislation, applicable national regulations must be respected when disposing of them.

For the disposal of the product and parts, use public or private waste disposal contractors.

For further information on the proper disposal of the product, contact the local authorities, the refuse collection and processing department or the point of sale where the product was purchased.

Appliances or equipment bearing this symbol must not be disposed of with household waste, but must be collected separately.

Proper recycling helps to prevent environmental damage and health risks.

2.5 Guarantee

Your appliance is covered by a contractual warranty for any manufacturing defect, the duration of this warranty is 18 months from the date of manufacture.

Our liability as a manufacturer cannot be claimed for any misuse of the appliance, any defect or insufficient maintenance of it, or any improper installation of the appliance (it is your responsibility to make sure that it is carried out by a qualified professional). In particular, we cannot be held liable for material damage, intangible damage or personal accidents

resulting from an installation that is not compliant:

- with legal and regulatory provisions or those imposed by local authorities,
- with national, even local and specific provisions governing the installation,
- with our installation manuals and instructions, in particular the regular maintenance of the appliances,

- with standard industry practices.

Our warranty is limited to the exchange or repair of only those parts recognised as defective by our technical services, excluding labour, travel and transport costs.

Our warranty does not cover the replacement or repair of parts due to normal wear and tear, misuse, unqualified third party intervention, lack of or inadequate monitoring or maintenance, non-compliant power supply and the use of inappropriate or poor quality fuel.

Sub-assemblies, such as motors, pumps, electric valves, etc., are only guaranteed if they have never been dismantled.

2.6 General recommendations

The MCHRT thermal module is designed for collective, office and industrial heating.

This boiler must be installed in sufficiently ventilated premises. The installation must comply with the rules and regulations applicable in the country.

The proper operation of the boiler depends on proper installation and commissioning.

DO NOT INSTALL THE BOILER IN:

Premises with a risk of explosion,

Buildings where chlorinated vapours are present,

Extremely damp premises (electrical hazard).

It is the responsibility of the installer, after having checked that the installation complies with the requirements of this manual.

1- To inform users :

That they cannot make any alterations to the appliance design and installation; The slightest alteration (exchange, removal, etc.) of safety components or parts affecting the performance of the appliance or combustion hygiene systematically results in the removal of the CE marking for the appliance.

It is essential to have the prescribed cleaning and maintenance operations carried out. A preventive yearly maintenance operation is mandatory.

2– Document to be given to the user :

This manual is an integral part of the appliance and must therefore be kept and always accompany the appliance, even if it is transferred to another owner or user.

As we are committed to our product quality, we are constantly seeking to improve them. We therefore reserve the right to modify the specifications indicated in this document at all times.

2.7 Installation in France

The installation must comply with the applicable regulations and trade practices, in particular:

the Order of 2 August 1977: Technical and safety rules applicable to fuel gas and liquefied hydrocarbon installations located inside residential buildings and their outbuildings.

DTU 65.4 on boiler rooms and NF DTU 24.1 covering flues and ducts, as well as national and prefectoral regulations.

NF DTU 61.1 standard: Gas installations in dwellings.

Regional Health Regulations.

NF C 15-100 (version 2002) standard: Low-voltage electricity installations - Rules.

Fire Safety Regulation:

GZ Articles: Installations using combustible gases and liquefied hydrocarbons

CH Articles: Heating, ventilation, air conditioning and domestic hot water production.

2.8 Installation in Belgium

The installation and maintenance of the appliance must be carried out by a qualified professional, in compliance with applicable regulations and trade practices, namely, for Belgium, the NBN D51.003, NBN D51.004 and NBN D61.001 standards.

3. RECOMMENDATION FOR USE

3.1 Water circuit

In order to minimise scaling and thus increase your installation service life, it is essential to comply with the following rules from the time of installation until the end of the equipment's service life.

3.1.1 Supply :

Cold water supplies must comply with the standards and regulations of the country of installation. It is essential to provide a pollution backflow preventer on the installation filling point.

The circuit must be rinsed at least twice, and the water treated before being injected into the installation.

The maximum hydraulic pressure must not exceed the safety valve tare pressure of max. 6 bars and must never be lower than 1 bar.

3.1.2 Preparation:

For new installations

Thorough cleaning of the circuits, it is essential to eliminate all deposits, residues or germs from them. Improper cleaning will result in deposits that are detrimental to the proper operation of the installation.

For refurbishment installations

In addition to the instructions above, it is essential to de-sludge the existing installation. To do this, call on the services of a professional water treatment specialist.

Caution, failure to follow these instructions may lead to poor installation performance, excessive energy consumption, scaling or corrosion. .

3.1.3 Scaling:

Limestone, or scale, is naturally present in water. Water is said to be "hard" when it contains an excessive amount of calcium and magnesium salts. Water hardness is measured by the calcium and magnesium ion content of the water. This is sometimes referred to as TH and expressed in °. 1° = 10 mg/litre of calcium carbon a représente la somme des ions calcium et magnésium contenus dans l'eau. 1° = 10 mg/litre de carbonate de calcium.

In order to avoid the "scaling" of your boiler, you must respect the following rates:

- filling water: 5°f > TH < 10°f

If your water does not respect these levels, you must treat the filling and top-up water.

Caution, the water supply top-up must be controlled and accounted for by installing a water meter. Do not exceed 4 times the volume of the total installation circuit, filling + top-up, during the entire lifetime of the installation! When there are works on the installation, drain only the sections affected by them. Do not completely drain the circuit.

- If there is a softener on the installation, make sure to check the discharge of chloride-rich water, the concentration must always be less than 50 mg/litre.

To reduce the risk of scaling on the heating elements, please follow the procedures below:

Check that the heating circuit is leak tight.

Commissioning must be gradual, boiler operation at minimum power and high primary water flow rate.

For modules composed of several boilers, start them all simultaneously at minimum power to avoid scaling in the first boiler.

If there is excessive deposit, please check, and if necessary, readjust the your installation parameters to comply with the required parameters.

If necessary, have the system cleaned/de-scaled by a professional water treatment specialist. .

3.1.4 Protection of boilers from corrosion:

Corrosion is due to the presence of oxygen in the heating water. If it is not renewed, for example by topping up with water, the oxygen contained in the water from the initial filling of the installation quickly disappears by reacting with the materials used. The service life of your installation depends on the pH of the water, which must be between 7.5 and 9.5, and the concentration of dissolved oxygen < 0.1 mg/litre.

3.1.5 Recommendations

Following a few rules can prevent the renewal of oxygen in the installation.

- Use a membrane expansion vessel

- When cold, the pressure in the installation must be higher than 1 bar

Always make sure that the various components used on the installation are leak tight.

If you are unable to prevent the introduction of oxygen into the circuit, you must take appropriate measures

to treat the water, contact a water treatment specialist.

If the materials used for the installation are heterogeneous (copper, aluminium, etc.), you must take appropriate measures to treat the water in order to avoid corrosion, by adding an inhibitor for example, and contacting a water treatment specialist.

Compliance with these recommendations limits the monitoring of the installation, at least 3 times a year including at least once a year in an external laboratory, to :

- check and control top-up water quantities

- check the pH

- check the hardness

If you notice any deterioration during the checks, you must take appropriate measures and, possibly, you must contact a water treatment specialist. .

If you are not able to comply with all these requirements to protect the boiler, we recommend the separation of the primary circuit from the secondary circuit by the installation of a plate exchanger.

3.1.6 De-sludger:

It is almost impossible to keep a circuit perfectly clean, especially due to residue stuck in gaps or points in the installation, and especially, the oxidation of certain parts of the circuit (steel radiator for example). This is why it is imperative to install a sludge filter on new or existing installations, on the boiler return.

3.2 Air circuit

The combustion air must be free of any substances harmful to the heat exchanger. Combustion air containing dust, debris, airborne and other contaminants is harmful to the appliance and to people. The thermal modules are fitted with high and low air ventilation to provide the burner air supply.
The air intake sections must never be closed off. For snow-covered areas, plan to raise the thermal module.

The following list indicates the places where combustion air should not be:

Products to be avoided completely	**Source of contaminants to avoid**
Hydrochloric acid, bromide, iodine	Photo laboratory, chemical / plastic factory
Halogen agents (chlorine, bromine, iodine, fluorine and astatine)	Swimming pool, jacuzzi
Detergents, cleaners, softeners	Laundries
Chemical fertilisers, pesticides, herbicides, dust, methane	Farms, animal production or manure
Paints, varnishes, solvents, cements, adhesives and sawmill dust	Sawmill, furniture workshop
Perchloroethylene, hydrocarbon-based cleaners	Industrial dry cleaning site
Cement powder, cellulose, ceramic-based insulation	Cement plant
Acid hair styling solutions	Hairdressers, beauty salon
Solvents, cutting oils, fibreglass, cleaning solvents	Bodywork, metallurgical workshops

4.INSTALLATION RECOMMENDATION

4.1 Installation recommendation

In order to guarantee the correct and safe operation of the appliance, it is essential to respect the distances indicated below:
- Provide a horizontal platform that can support 1 tonne and has a minimum size of 1.5 x 2.5 metres
- Provide sufficient clearance to open the doors.
- The module must be placed at least 60cm from the nearest wall.
- Place the centred and level module on the platform.

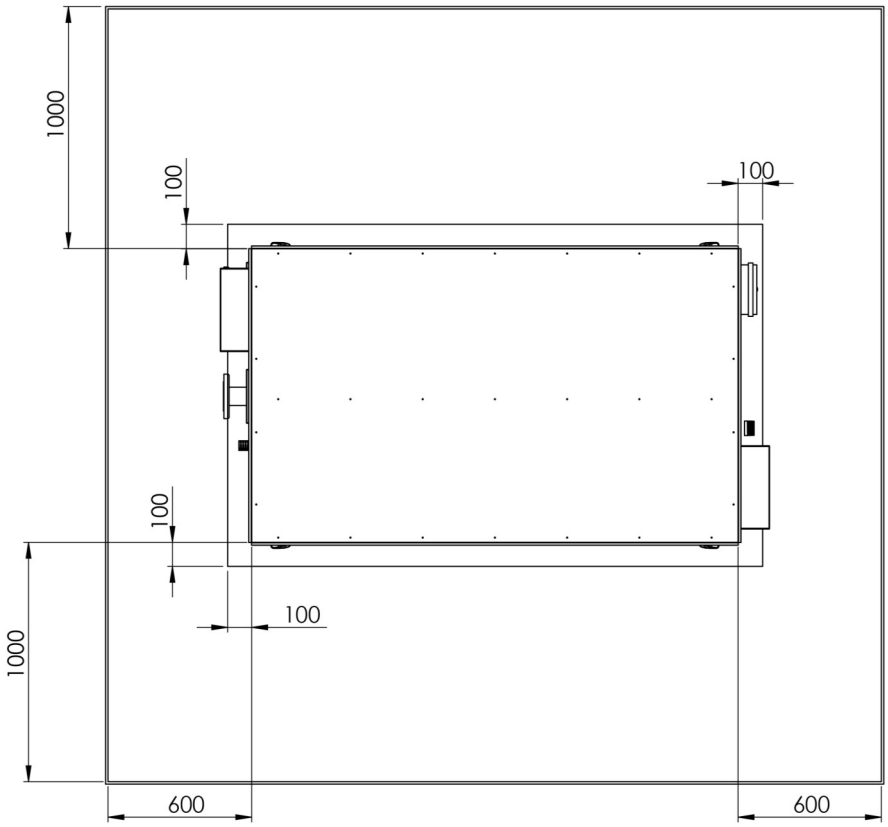

5. INSTALLATION RECOMMENDATION

5.1 Description of the thermal module

The MCHRT thermal module is fitted with condensing gas boilers running on natural or propane gas. Depending on their power, they are composed of 2 to 4 CH125 boilers. Each boiler is equipped with a pre-mix burner and a gas flow adjustment system using an air/gas ratio electro-pneumatic valve.
Each boiler runs on the different gases indicated on its identification plate in compliance with the European directive.
Each boiler is fitted with a management board controlling gas safety and module operation and regulation.
The management board is fitted with a display informing users of the boiler status.
Each management board must be connected to the installation Modbus network at a specific address.

5.2 Thermal module operation

The MCHRT thermal module is an appliance designed to produce hot water for heating. Each boiler is fitted with a low NOx premix burner.
The combustion air drawn in by a variable flow fan passes through a venturi system that draws in the correct amount of gas depending on the air flow.
The air/gas mixture is conveyed to the burner located in the middle of a stainless steel tube exchanger.
The combustion gases will pass through the exchanger twice in order to dissipate as many calories as possible. This technology allows minimum efficiencies of 96% at maximum power and 108% depending on boiler return temperatures.
Optimising the performance of a condensing system is linked to its regulation.
The lower the return temperature, the higher the boiler's performance.
The boiler modulation ratio is 100% to 25% of power. When connected in cascade, the modulation ratio can reach 100% to 5% depending on the model
The boiler's electronic board associated with the heating optimiser makes it possible to continuously monitor the thermal power modulation between the minimum and maximum values. The boiler room modulating operation guarantees a perfect adaptation to the real needs of the building .

5.3 Schematic diagram of the module

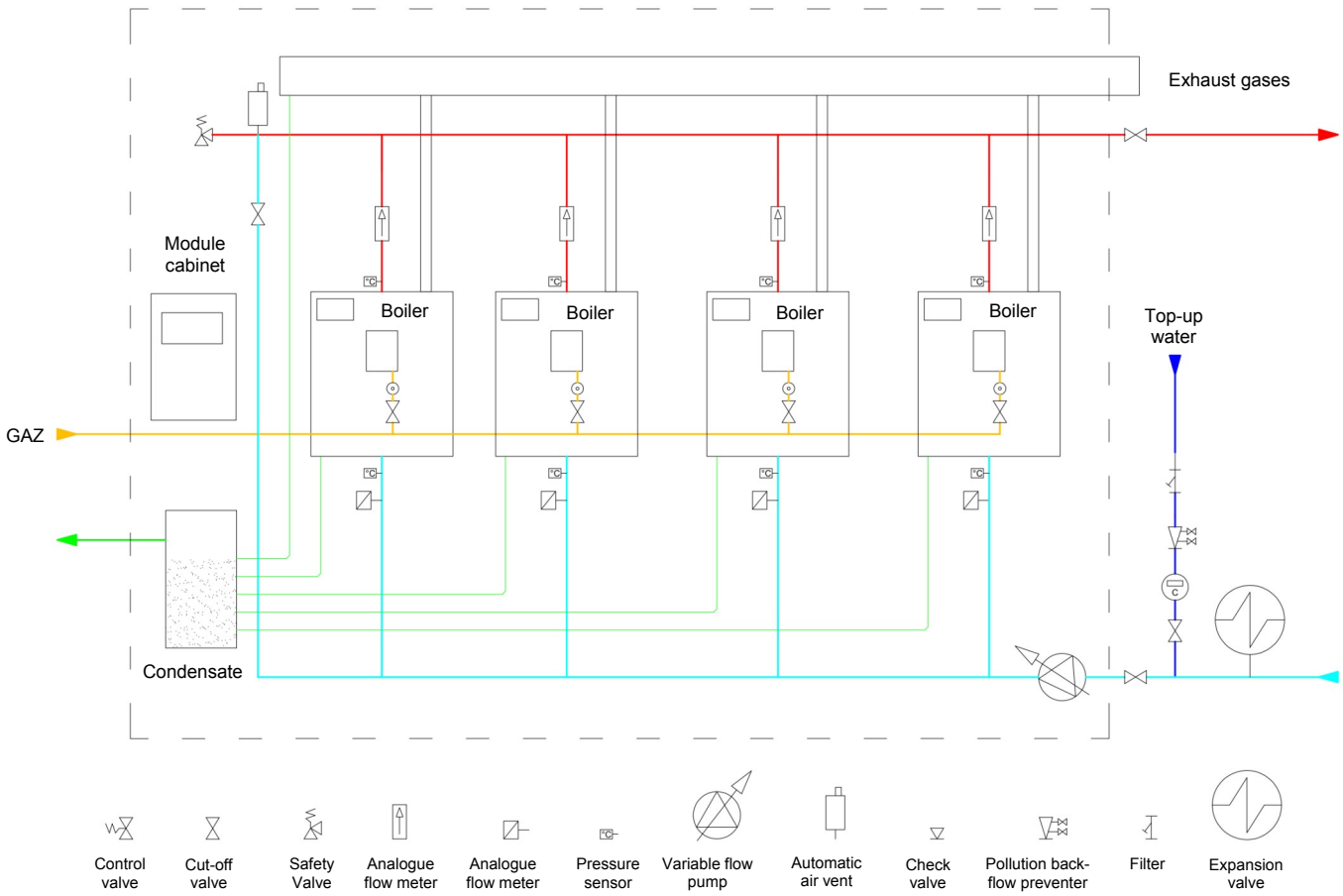

6. TECHNICAL SPECIFICATIONS

6.1 MCHRT module performance :

MCHRT model		02125	03125	04125
Rated heat flow	kW	250	375	500
Minimum heat flow rate	kW	25	25	25
Rated working power at 80/60°C *	kW	240	360	480
Rated working power at 50/30°C	kW	270	405	540
Rated working power at 30% load *	kW	82	123	166
Loss when shut down *	kW			
Gas consumption - operating pressure				
Natural gas G20 20 mbar	m3/h	26.44	39.66	52.88
Groningue G25 25 mbar	m3/h	30.76	46.14	61.52
Propane G31 37 mbar	kg / h	19.4	29.10	38.80
Boiler performance				
PCI thermal efficiency 100% of the load (80/60°C) *	%	96.2	96.2	96.2
PCI thermal efficiency 30% of return load 30°C *	%	108	108	108
Modulation ratio		10	15	20
NOx Class		Cl.5	Cl.5	Cl. 5
Hydraulic performance				
Maximum boiler water outlet temperature	°C	85	85	85
Minimum operating temperature *	°C	20	20	20
Max. working pressure	Bars	6	6	6
Min. service pressure	Bars	1	1	1
Head loss at rated water flow rate of 4,000 l/h	mCE	1.8	1.8	1.8
Head loss at a minimum water flow rate of 3,000 l/h (T difference max. 35°C)	mCE	1	1	1
Exhaust gas parameters				
Maximum exhaust gas temperature	°C	94	94	94
Condensate flow rate (80/60°C)				
Rated power	L/h	10.4	15.6	20.8
Partial load	L/h			
Available exhaust gas pressure	Pa			
Exhaust gas / combustion air outlet connection	mm	Ø100	Ø100	Ø100
Electric parameters				
Power supply	V	230V-50HZ	230V-50HZ	230V-50HZ
Electric power of auxiliaries at rated power (excluding circulator) *	W	430	645	860
Electric power of auxiliaries at zero load (excluding circulator) *	W			
Amperage (excluding circulator)	A	1.86	2.79	3.72
Weight (excluding heating circuit outlet module)	Kg	156	228	312

6. TECHNICAL SPECIFICATIONS

6.2 MCHRT 02125 thermal module dimensions

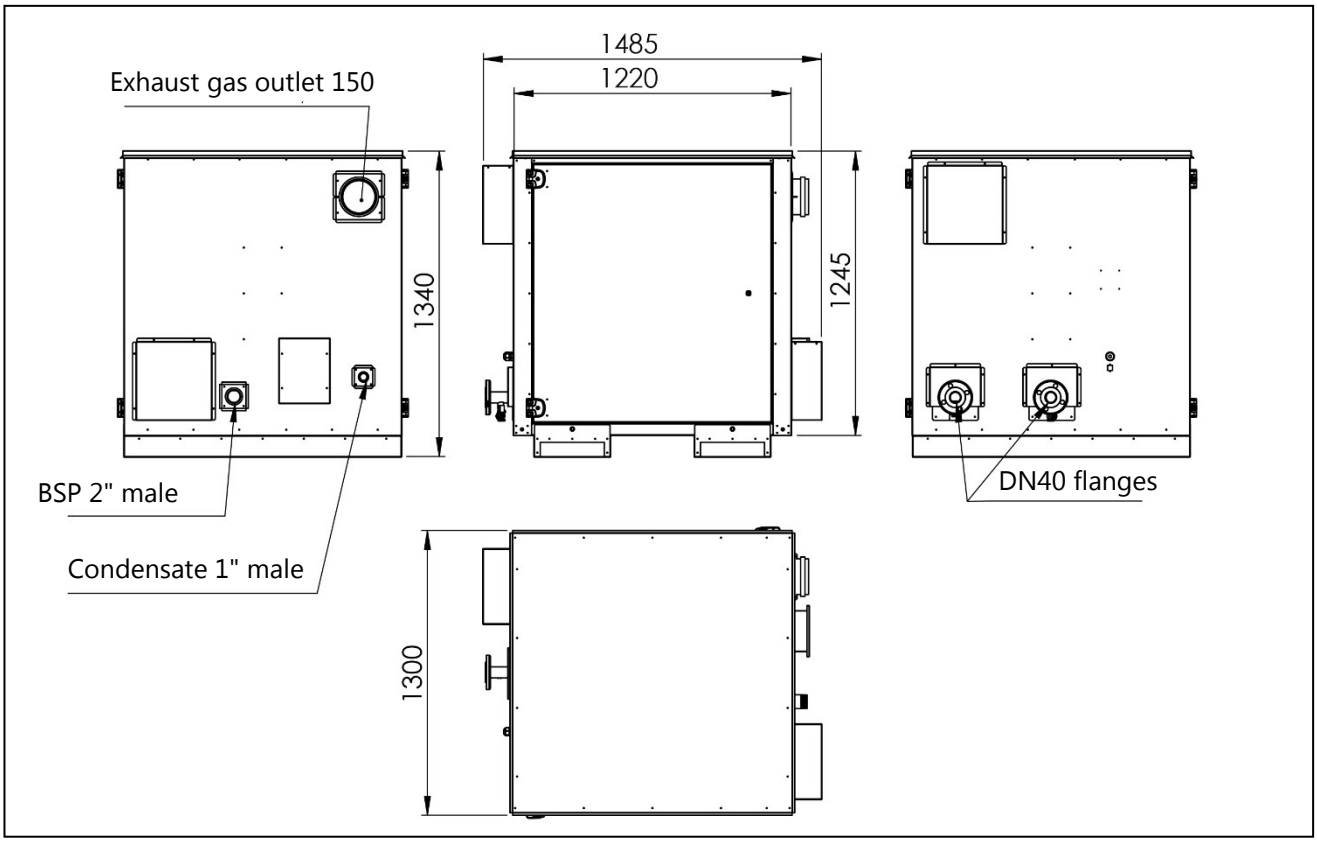

6.3 MCHRT 03125 / 04125 thermal module dimensions

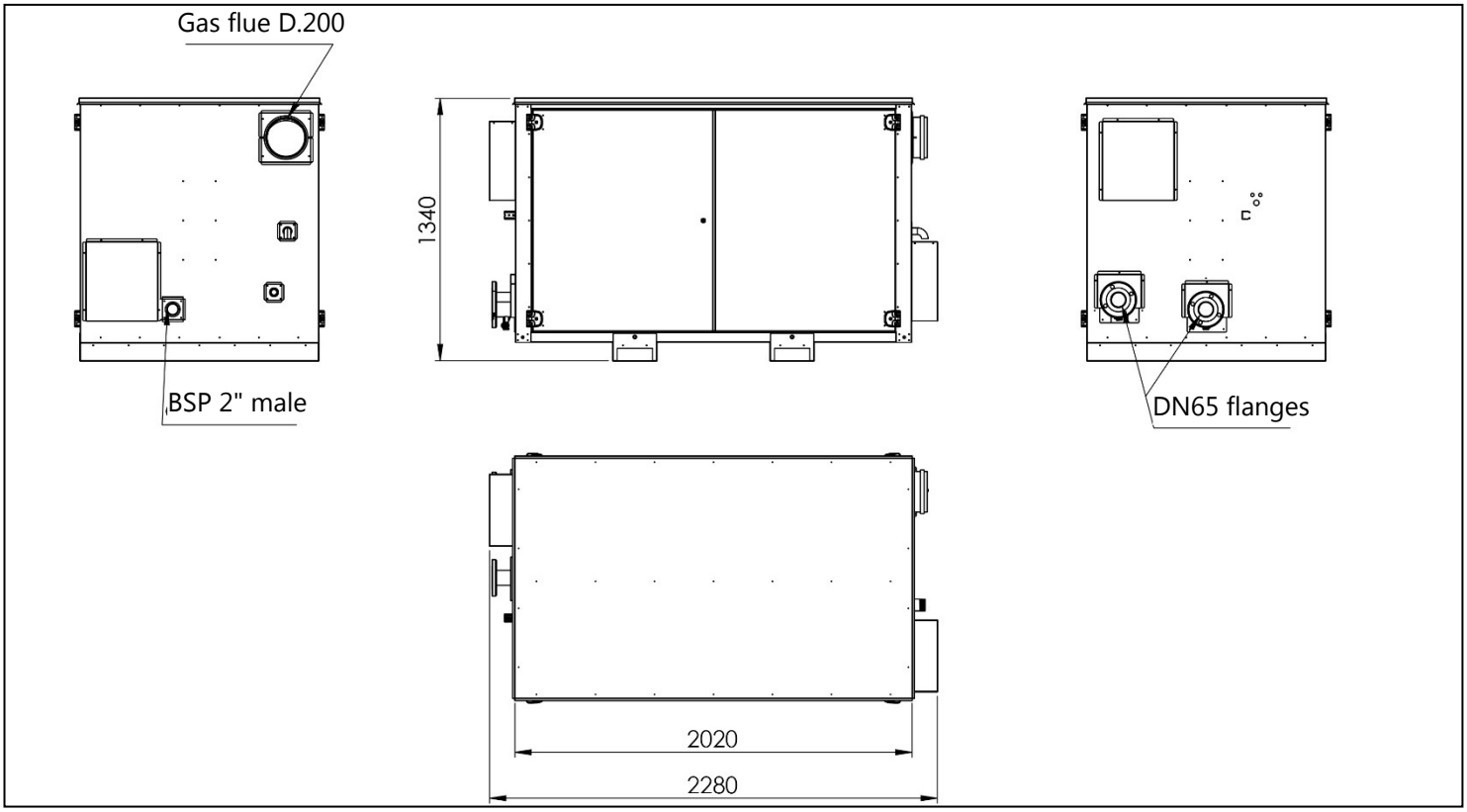

7. HYDRAULIC CONNECTION

7.1 Hydraulic connection

Connect the network to be heated to the thermal module on two rotating flanges.

Provide for:

- The installation of two cut-off valves at the module inlet.
- Upstream of the cut-off valves, the installation expansion must be correctly sized according to the volume of water in the installation, the temperature rise and the installation height.
- Caution: Incorrect expansion tank sizing may cause the safety valve to open and therefore require a permanent topping up of water in the installation.
- Installation filling will be carried out upstream of the cut-off valves by means of a valve and a pollution backflow preventer to prevent tap-water circuit pollution

Connection principle diagram

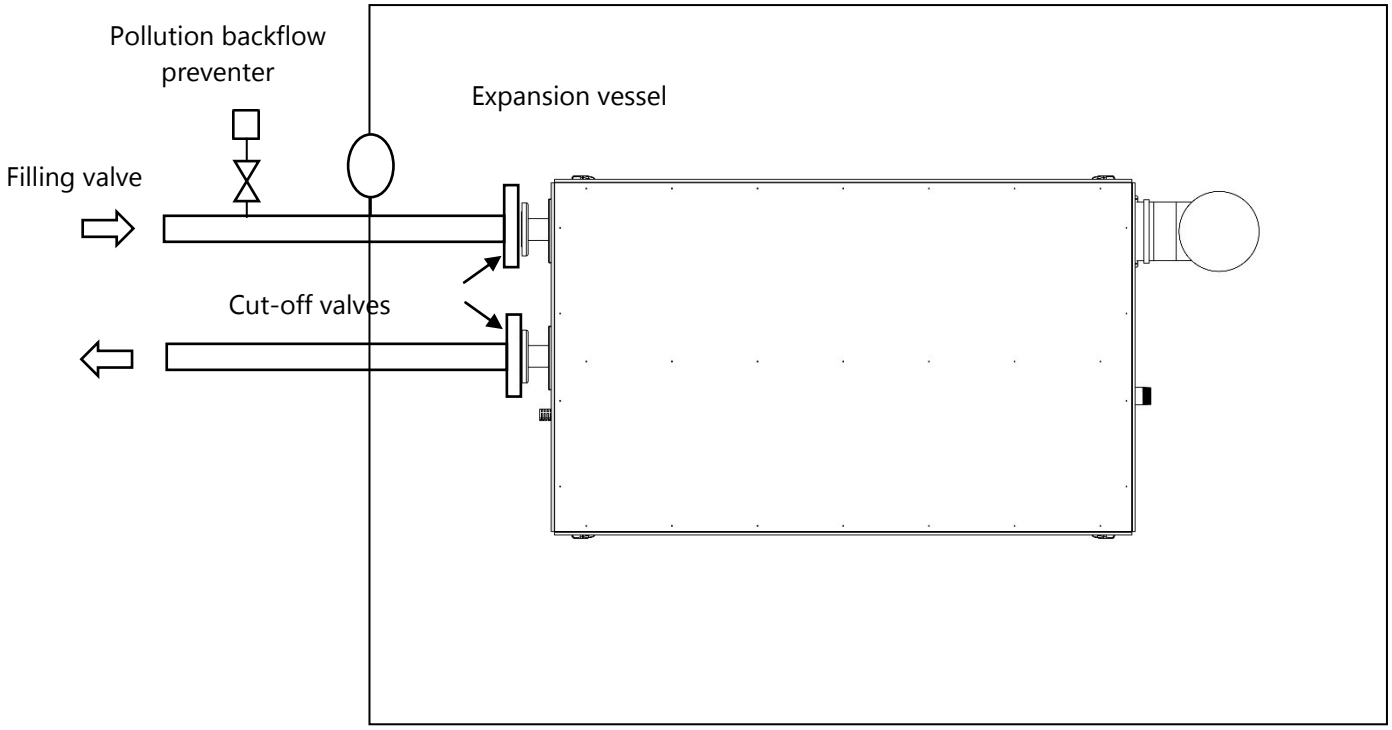

8. GAS CONNECTION

8.1 Thermal module gas classification

The MCH500 thermal module can be used with the gases defined in the table below depending on the country and gas category. It is important to make the gas connection taking into account the regulations applicable in each country. A circuit leak test must be carried out before the installation is commissioned.

Country	Supply pressures (mbar)	Catégories d'appareils
FR	20/25; 37	II2Esi3P
DE	20; 50	II2ELL3B/P
ES-GB-IE-PT	20; 37	II2H3P
CZ-DK-FI-GR-SE-IT-SI-SK-NO- HR -EE-LT-LV-BG-RO-TR	20; 30	II2H3B/P
AT-CH	20; 50	II2H3B/P
LU	20; 37/50	II2E3P
NL	25; 30	II2L3B/P
BE	20/25	I2E(R)B
BE-IS	37	I3P
MT-CY	30	I3B/P
HU	25; 30 or 50	II2Hs3B/P
PL	20; 13; 37	II2ELsLw3B/P

8.2 Gas connection

A precise study must be made of the pipe diameters depending on the gas flow type and the pipe lengths. The pipe head loss must not exceed 10%.
Connect the gas using a removable connection on the waiting 2" male BSP threaded pipe.
Provide a cut-off valve at the input.

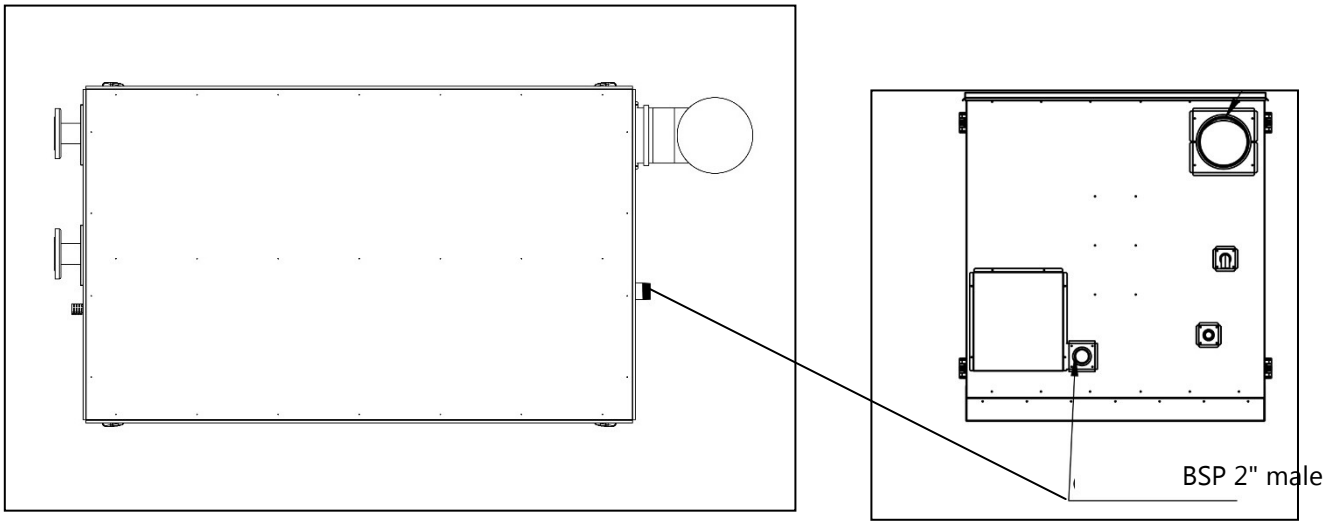

Caution, always check leak tightness up to the solenoid valve before commissioning using appropriate means.

8.3 Gas expansion upstream of the burners

The gas supply to each burner must be adapted to the type of gas and its distribution pressure. Based on these criteria, it will be a good idea to select the appropriate gas line. CAUTION Any supply pressure higher than the maximum inlet pressure tolerated by the gas solenoid valve would result in irreparable damage to the valve.

	Natural Gas G20 / G25	Propane Gas G31	Butane Gas G30
17 to 50 mbar	Kit n°1	No	No
200 to 300 mbar	Kit n°2	No	No
1 to 1.5 bar	contact us	Kit n°3	Kit n°3

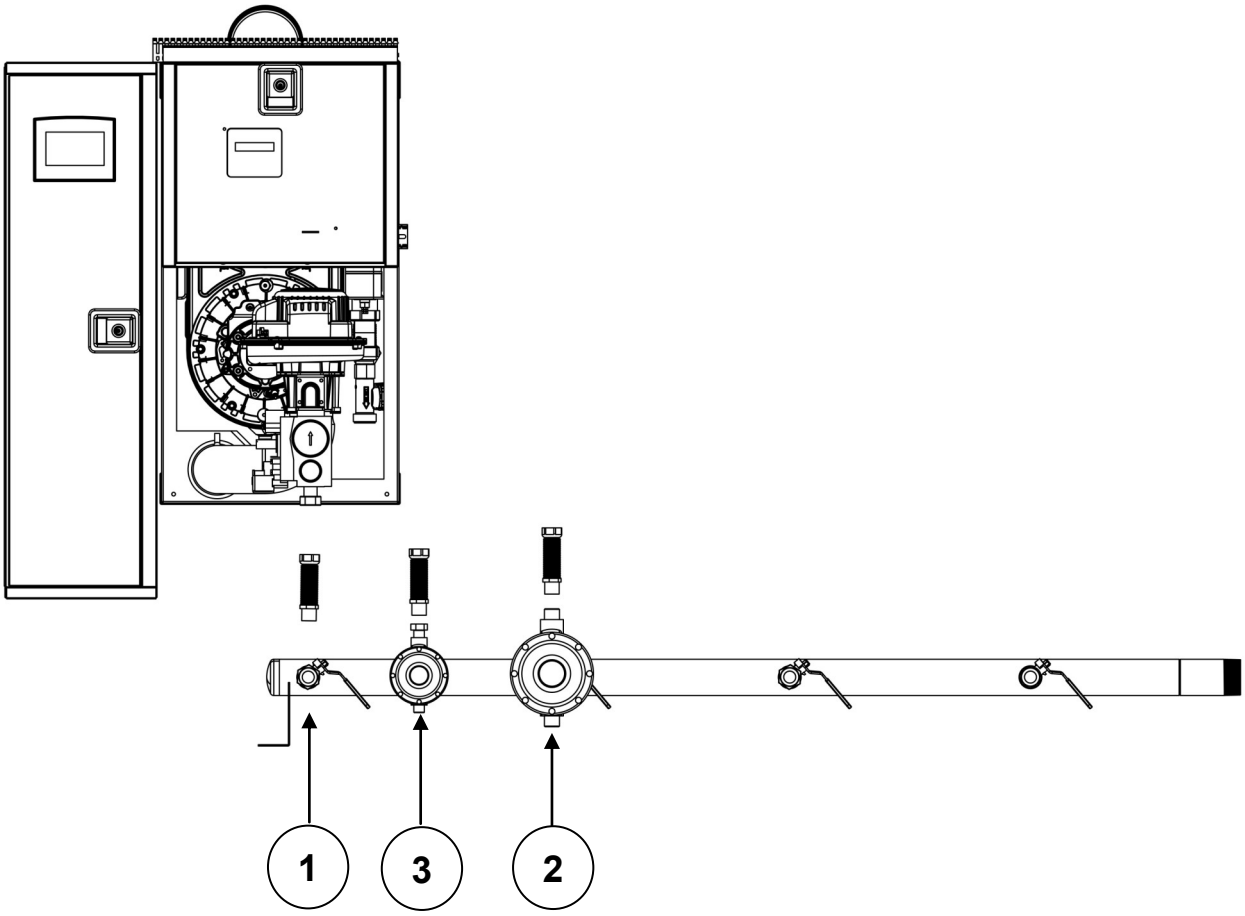

Be careful, always provide adequate filtration upstream of solenoid valves and gas expansion valves. Before commissioning, make sure that the gas pipe is not soiled by particles generated during the installation .

9. CONDENSATES

Condensing gas boilers produce acid condensates that must be evacuated in compliance with applicable regulations in the country of installation. Each boiler is connected to a central drain. The drain is an integral part of the appliance, it is a safety system component, any replacement by another unapproved type is strictly prohibited. .

Installation :
For the condensation water drainage system, use PVC pipes with a diameter at least equal to that of the appliance (Ø 32 PVC). Make sure that the piping is always installed lower than the top of the drain. The connection must be removable and the condensate flow visible.
Before using the boiler, fill the drain with water through the filling plug to prevent exhaust gases from being released. .

Condensation water neutralisation :
The acidity of the water obtained from the combustion of natural gas is pH 3.5-3.8. Depending on the installation region, some regulations require condensate treatment. In that case, provide for a neutralisation kit. The pH at the outlet must be measured annually to make sure that the neutralising agent is effective. .

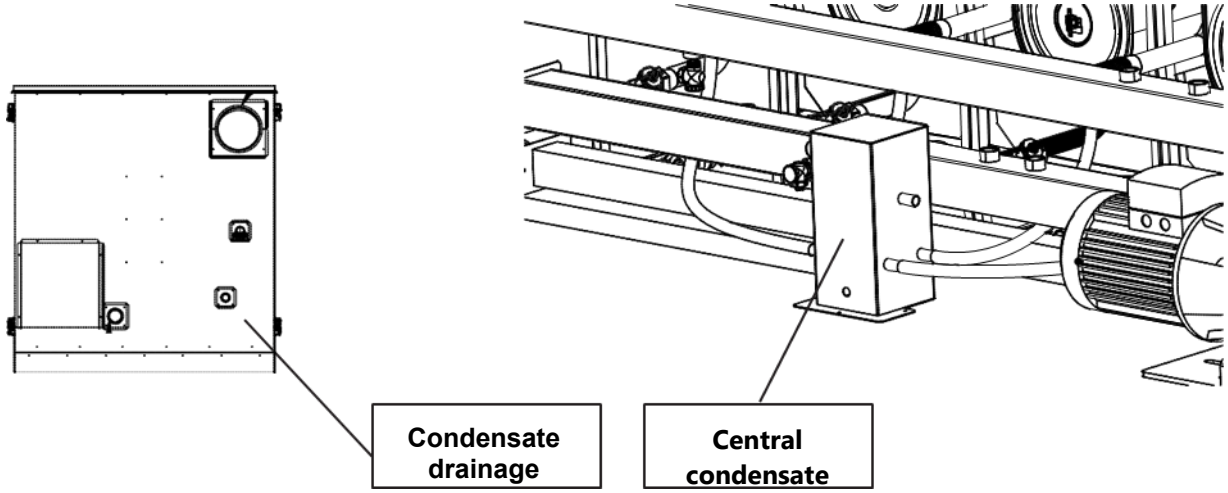

10. Soupape de sécurité

A safety valve is used to manage any excess pressure in the system. Make sure that its evacuation is never closed off. The MCH500 thermal module is fitted with a 3 bar valve as standard, but as an option it is possible to use a 6 bar version. This option requires a new boiler control box configuration. This operation can only be carried out at the time of ordering.

11. EXHAUST GAS CONNECTION

The thermal module is fitted with a lateral combustion product evacuation. This must be connected to a flue of equivalent cross-section.
The thermal module must not bear the weight of the exhaust gas flue. For this purpose we recommend using a chimney base plate fixed onto the slab to bear the forces on the ground and its fixture.
The installation of the flue and its height must be compliant with applicable regulations in each country.

Chimney installation and support

CAUTION
The module is not load-bearing and therefore cannot support the chimney.
Care must be taken to fix the chimney in a strong and stable manner in contact with the ground

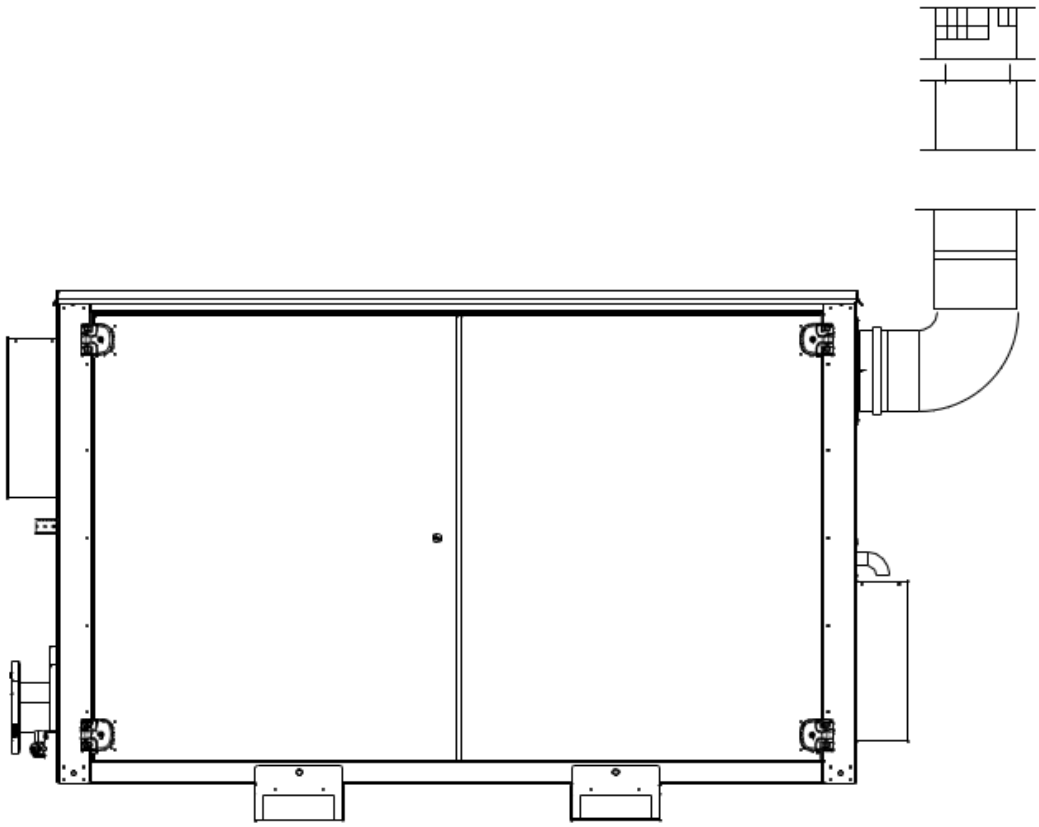

12. ELECTRIC CONNECTION

12.1 Power connection

Connect the thermal module in three-phased 380V + N to the power supply on the general protection 2. cable size must be calculated according to its length and respecting the current consumed by the module. (See page 10) A lockable proximity cut-off switch will be provided for near the module .

12.2 Control and fault reporting connection

The power supply board has a 24 VDC output for system fault reporting. Depending on the configuration, it can be positive or negative. Caution: max. output current 50 mA.
The regulation signal must be connected to connector JP10 between the IN and 0V terminals. The applied voltage will be considered as the power or temperature set point depending on the regulator programming. See "Regulation and settings" section on page 18. For regulation based on room temperature, connect the temperature sensor between 24V and IN.

12.3 Electric connection diagram:

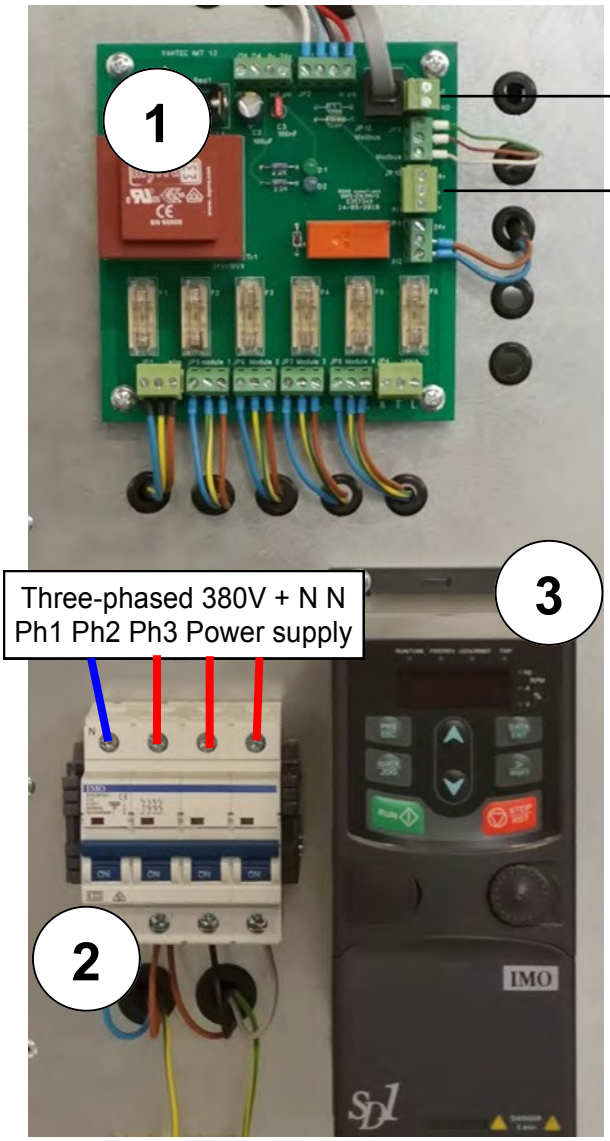

OUT	Thermal module fault output
GND	24VDC

24V	0-10V regulation set point input on IN and 0V terminal
IN	
0V	

1	Power supply board
2	General protection
3	Circulator variable drive

13. REGULATION AND THE SETTINGS

Regulation

The regulation programme operates on a 0-10 Volt signal provided by the customer. This signal determines the power to be used. The start up and cascade is managed automatically depending on the required temperature and power. The programme also determines the speed at which the circulation pump should run by acting on the pump variable drive.

A password-protected after-sales mode gives access to the configuration pages. The after-sales mode button is subject to a timer and locks automatically if no activity is engaged for 2 minutes.

In this after-sales mode, the temperature limits can be set (maximum tolerated output flow temperature, Frost Protection mode triggering and stoppage limit temperatures). To avoid the water freezing, the frost protection mode restarts the system to maintain the water in the circuit at a certain temperature.

The combustion setting for each boiler is accessible in the after-sales pages, during the operation, the records are made automatically.

The circuit:

The boiler flow rate must not be less than 3500 l/h at 30°C.
The pressure safety is preset to 0.5 bar for minimum pressure and 2.8 bar for maximum pressure.
A lack of flow can be caused by a too open bypass, incorrect pump set point adjustment on the regulator, incorrect circulator sizing, improper drainage, or an overly resistant heat transport circuit.
To change the circuit settings, go to the circuit configuration section.

PID function:

The use of a PID is reserved for the "0-10V > temperature" operating mode. When you select this mode, by default the system pre-sets the following values:
Proportional band = 40°C
Integral time = 20s
Derived time = 0s
The PID setting must be adjusted when the output flow temperature cannot be stabilised.
To change the PID values, go to the PID value configuration section.

Regulation modes:

The different available regulation modes are as follows:
"0-10V > Power. ": The power applied is the image of the voltage input. 0V = 0% and 10V = 100%.
"0-10V > Temp. ": The 0-10V input provides a temperature set point. 0V = 0°C, 1V = 10°C ...
The temperature set point is limited by the maximum temperature.
"2 points > Power": The 0-10V input is used to increase or decrease the power set point. If the voltage is 10V, the power demand increases by 1% every 0.5 seconds. If the voltage is 5V, the set point decreases by 1% every 0.5 seconds.
To change the active regulation mode, go to the configuration change section.

Frost protection function:

The regulator has a frost protection feature when the regulation is stopped.
When the water output temperature is lower than the frost protection temperature, the frost protection mode is activated. When the water output temperature is higher than the frost protection temperature + 5°C, the frost protection mode is deactivated.
When the frost protection mode is activated, the pump is started at the pump frost protection set point, and a boiler is started at low speed. .
To change the frost protection mode start temperature, go to the configuration change section. To change the frost protection mode flow rate, go to the circuit configuration section.

Navigating through the regulation programme

Before you begin, please study the regulation screen navigation functions

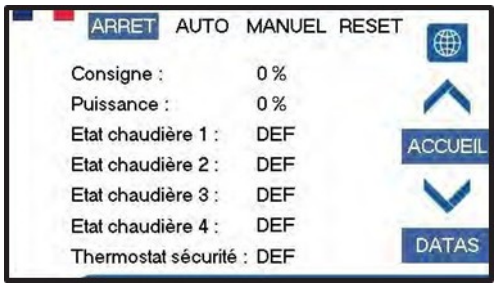

Start, stop keys, boiler fault reset keys and manual mode.

Navigation keys for next and previous pages

From any regulation page, press the key to change the language used.

Configuring the thermal module

To configure the thermal module, especially during commissioning, you must access the service pages below. Once access to these pages is activated, access remains active and open for 2 minutes without activity. To access the different value settings, follow the procedure below:

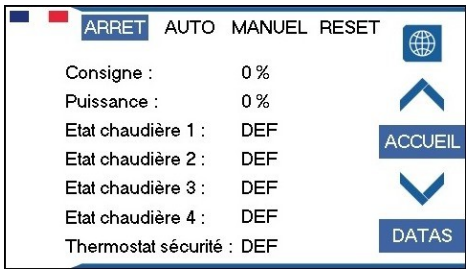

Press the key

Press "Enter password"

Enter the password and press the

Changing general configuration values

On this screen, you can configure the thermal module general values.

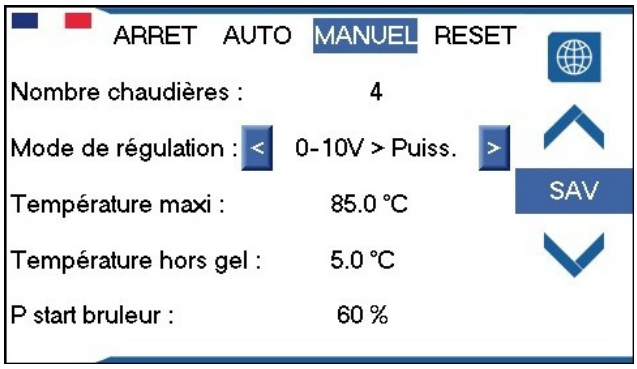

To change the number of boilers, press the "Number of boilers" value, enter the value and confirm.

To change the regulation mode, press the "<" or ">" keys. See page 18 for more information.

To change the max. temperature, press the "Max. temperature" value, enter the value and confirm.

To change the frost protection mode start temperature, press the "frost protection temperature" value, enter the value and confirm.

To change the burner start speed, press the "P start burner" value, enter the value and confirm.

Setting the safety temperature

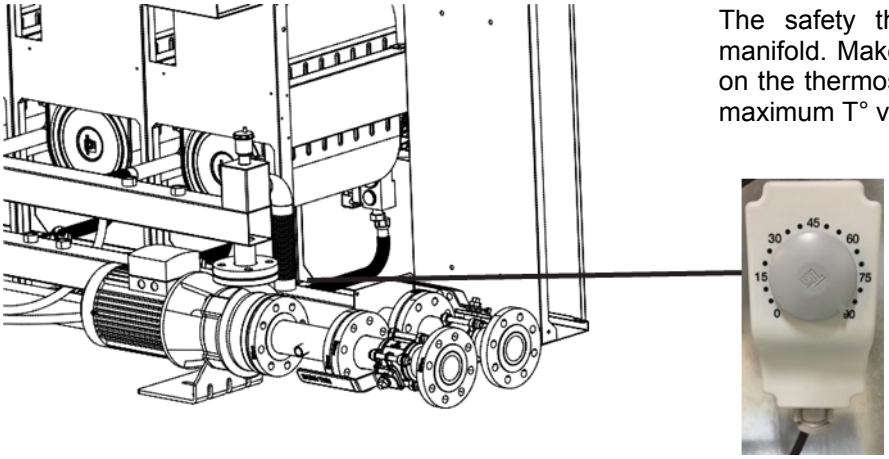

The safety thermostat is located on the outlet manifold. Make sure the maximum safety value set on the thermostat is slightly higher than the defined maximum T° value.

Modifying the circuit configuration values

On this screen, you can configure the module values for the system hydraulic circulation.

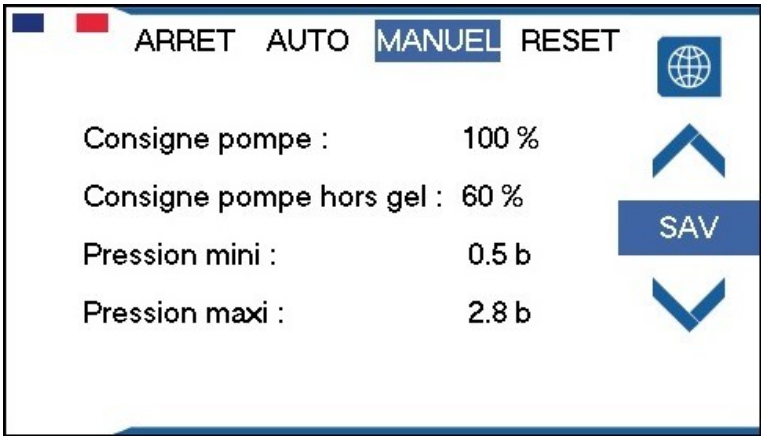

To change the pump set point, press the "pump set point" value, enter the value and confirm.

To change the pump frost protection mode set point, press the "pump frost protection set point" value, enter the value and confirm.

To change the min pressure, press the “Min. pressure” value, enter the value and confirm.

To change the max. temperature, press the "max. temperature” value, enter the value and confirm.

Setting the PID values

If you have chosen a "0-10V > temperature” regulation operating mode. (More information on page 18) The PID function is required and set by default . The PID setting must be adjusted when the output flow temperature cannot be stabilised.

To change the PID loop proportional band, press the "Proportional band" value, enter the value and confirm.

To change the PID loop integral time, press the "Integral time" value, enter the value and confirm.

To modify the PID loop Derived time, press the "Derived time" value, enter the value and confirm.

Adjusting the gas burner combustion

When commissioning the module or maintaining it, the gas burner combustion setting must be checked. The programme is automatic, just follow the steps below.

Step 1

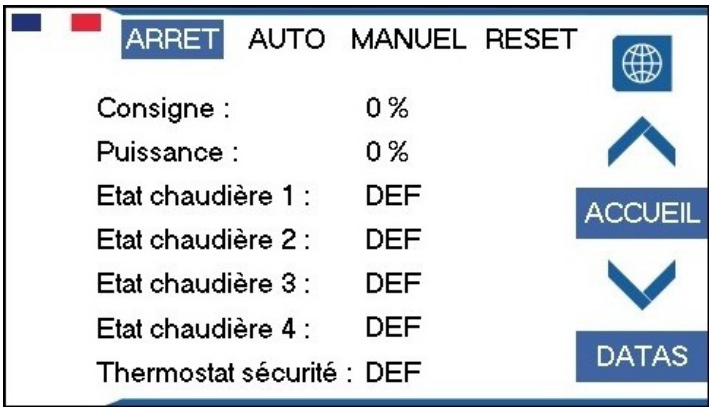

Start by selecting a Step 1 boiler. To do this, press the "^" or "v " keys to access the boiler pages.

Step 2

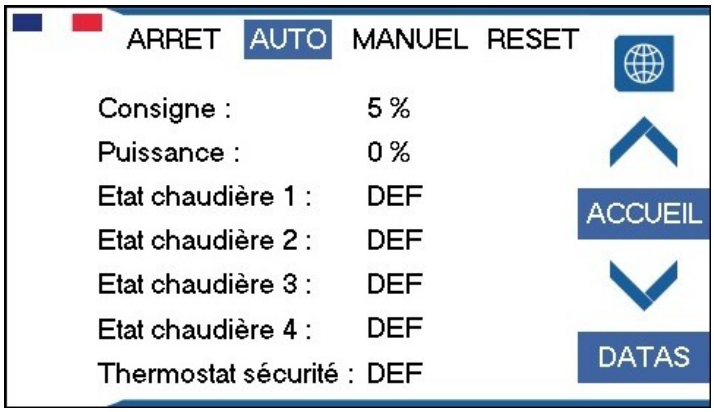

You are on the boiler n°1 page. Press and hold the key for 2 seconds to start the adjustment procedure

Step 3

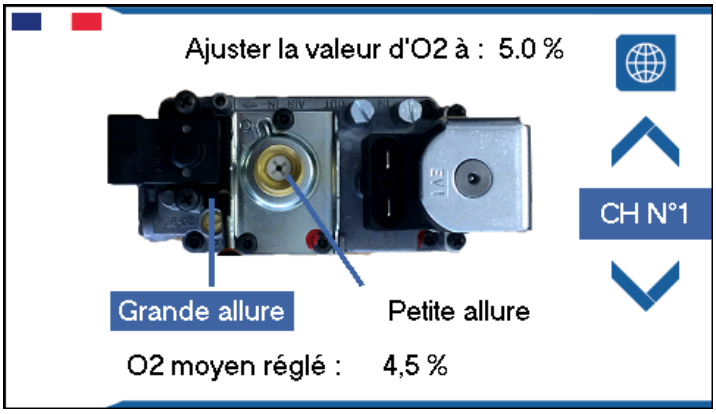

The procedure is launched and the boiler starts, you can now select the "high speed" or "low speed" mode. The values are recorded automatically.

Step 4

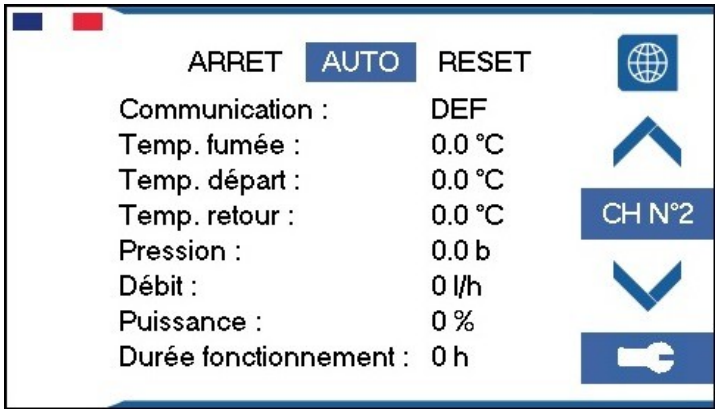

Once the O2 values have been configured, you can return to the boiler page using the navigation arrows to check the data and proceed to the next boiler

Commissioning

Once the module has been configured and all the commissioning checks on page 24 have been carried out, select the "AUTO" key to start up the installation.

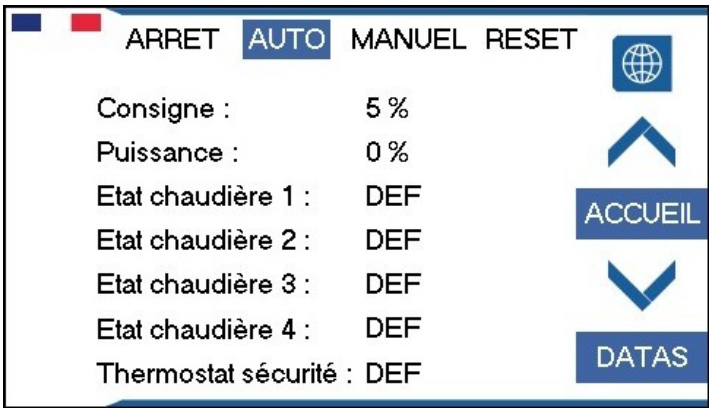

Start (Auto or Manual), stop, keys and boiler fault reset key.

Starting the manual mode

The regulator has a manual mode. The principle of the manual mode is to set a fixed temperature set point on the display and apply the "0-10V > Temperature" regulation mode without using the 0-10V input. The user -set regulation mode is then deactivated for as long as the manual mode is used. To activate the manual mode and set the temperature set point in manual mode, please follow the instructions below:

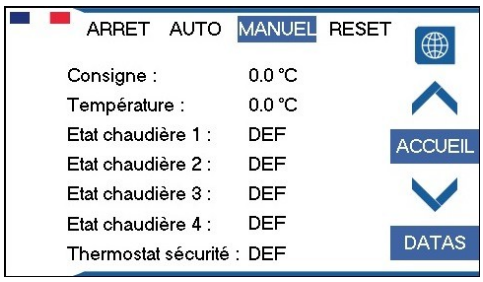

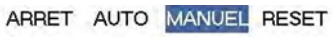

On the Home screen, press the "Manual" key to activate the manual mode. Press the "v" key to go to the manual mode set point page.

To set the manual set point, press the value, change it on the keypad and then press "enter" to confirm.

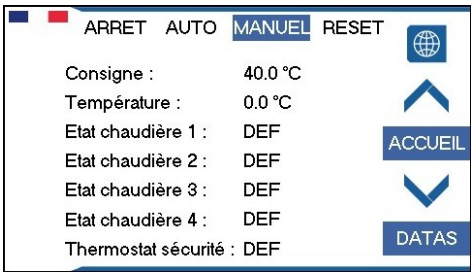

When you return to the home page, the set point is now visible and recorded.

Live monitoring relative to the set point

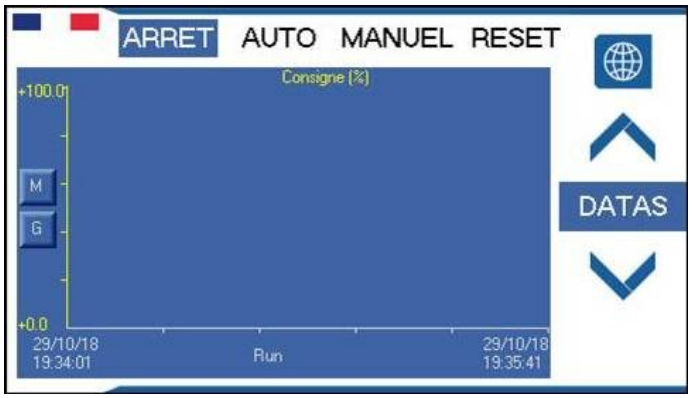

To change the highlighted curve, press the graph background.

The "G" key is used to display the grid.

To access the stored data, press "M", the word "run " is replaced by the 2 following buttons "<<"; ">>".

To go back in time on the saved data, press the"<<" key.

To advance in time on the saved data, press the ">>" key.

To resume live reading, press the "M" key again.

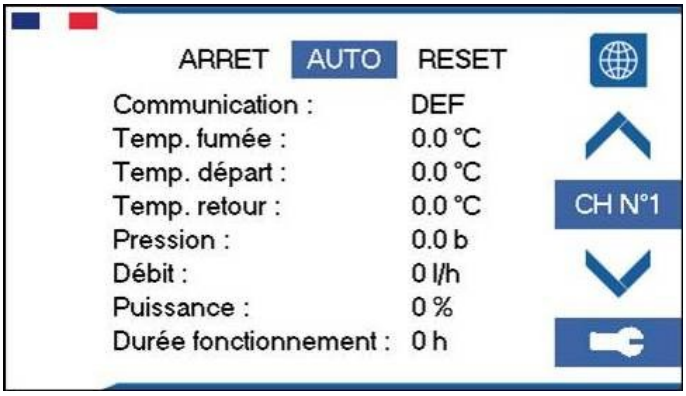

Press the "V" button until you reach the page for the boiler you want to shut down.

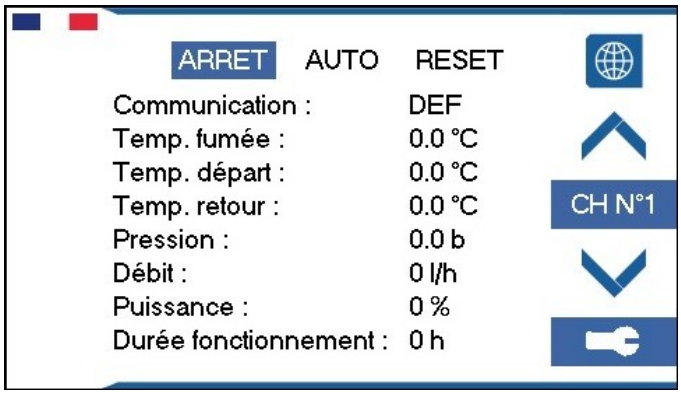

Press the "Stop" key to stop the boiler. Press "Auto" to reset it to automatic operation.

14. GAS BURNER

This operation must be carried out by a qualified professional equipped with a combustion analyser. Check the gas circuit for leaks after each intervention.

Required tools:
-Size 2.5 hexagonal male wrench (High speed air/gas ratio adjustment "4")
- Size 4 hexagonal male wrench (Low speed air/gas ratio adjustment "5")
- Combustion analyser (O2 / CO - Flue gas temperature)
- Gas pressure gauge max. pressure 50 mbar

Procedure to check and adjust the pre-mix burner:

1) Calibrate your combustion analyser and place the rod in the flue pipe.

2) Check the gas supply pressure before switching on, off and running (see table).

3) Start the burner:
- Switch to High speed mode (see regulator burner adjustment function on page 21)
- Check the oxygen value (O2)
- Adjust the value using screw 4 according to the table below. Turn clockwise to decrease the O2 value and anticlockwise to increase it.
- Switch to Low speed mode (see regulator burner adjustment function)
- Adjust the value using screw 5 according to the table below. Turn clockwise to increase the O2 value and anticlockwise to decrease it.
- Once the low speed rate setting has been completed, exit the regulation configuration

1	Burner fan
2	Air/Gas Mixer
3	Gas Solenoid Valve
4	High flow adjustment
5	Low flow adjustment

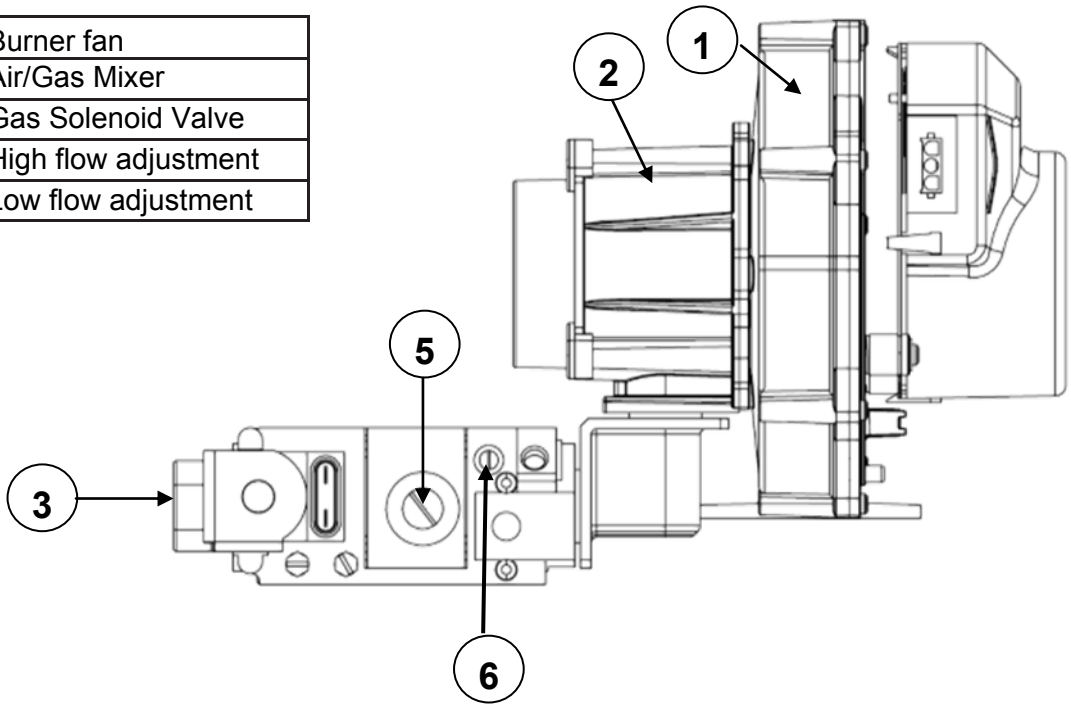

Burner adjustment values

Type of Gas	Pressure when stopped	Operating pressure	High flow O2 Screw 4	Low Flow O2 Screw 5	COMax. CO in PPM	
					NG	LPG
G20 (Natural Gas)	From 20 to 50 mbar	Min 18 mbar	4%	4.5%	160	200
G25 (Natural Gas)	From 25 to 50 mbar	Min 20 mbar	4%	4.5%	160	200
G31 (LPG Gas)	From 28 to 50 mbar	Min 25 mbar	4%	4.5%	160	200

15. COMMISSIONING

15.1 Electricity

Check the power supply voltage, it must be 380 VAC between each Phase and 220VAC between the Neutral and a Phase with a tolerance of (+/-10%).

15.2 Gas circuit

Check the gas circuit for leaks. Make sure that the general gas valve is open and that the gas line is purged.

15.3 Condensates

Check the condensate connection and fill the drains to prevent exhaust gases from being released into the drain.

15.4 Boiler room ventilation

Make sure that the high and low ventilations are not closed off.

15.5 Flue gas evacuation

Check the connection and leak tightness of the flue pipes as well as the strength of their supports.

15.6 Water circuit

Check that the network is leak tight.
Make sure that there is water in the installation and its pressure as well as that the air is properly vented from the hydraulic system.

15.7 Regulator configuration

15.8 Commissioning the installation

15.9 Boiler water flow rate

Check the flow rate of each boiler. It must not be less than 3000 L/h at a boiler outflow temperature of 30°C. A lack of flow can be caused by poor circulator sizing, poor venting or an overly resistant heat transport circuit. Check the flow rate on the boiler display.

15.10 Boiler commissioning

Commission the boilers one by one, and carry out a unit combustion analysis to make sure that the burners are working properly. These checks and adjustments are essential to provide proper combustion hygiene (See "Regulation and settings” section).

MAINTENANCE

16.1 General inspection

Check the general condition of the module at least twice a year or more if necessary.
It is important to check the tightening of the individual components and to remove any dust present. Check the gas, air, water and combustion circuits for perfect leak tightness (replace the gaskets if necessary). Check the tightening of the various electric circuits to avoid any risk of overheating.

16.2 Boiler irrigation check

Checking boiler irrigation is necessary at least twice a year or more if needed.
Good boiler irrigation is essential to maintain a good exchange between the combustion gases and the water circuit. A decrease in flow rate or exchange may be due to fouling of the hydraulic system due to sludge, scale or air in the installation (See "Recommendations for use" and "Description” sections)

16.3 Combustion chamber and burner check

Remove the gas tube on the left inside the boiler, the air supply hose at the bottom and the pressure transfer pipes from the gas valve and the mixer. Disconnect the electrodes, fan and gas valve. Unscrew the 6 M6 door fixing nuts. Remove the burner support, fan, gas valve assembly and gently place it
in a clean place.

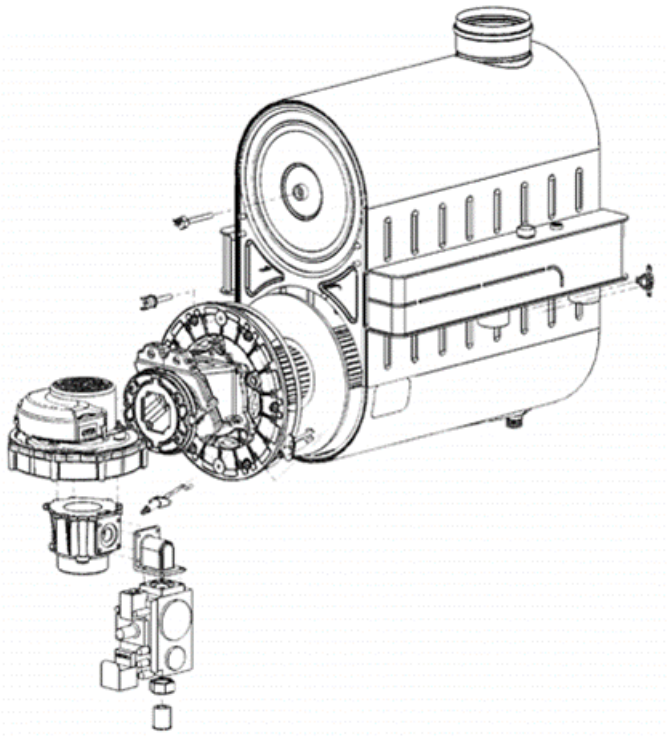

The distributed gas may contain substances that accelerate the fouling of the heat exchanger, in particular by black deposits (typically sulphur), volatile agents may also be another source of fouling.

If deposits are observed in the combustion chamber, they must be removed by vacuuming. The exchanger may need to be brushed using a flexible non-metal brush. Rinse with clean water until the exchanger is clean. Clean the drain after the operation. Any cleaning of the combustion chamber using acid or alkaline products is strictly prohibited.

Inspect and if necessary replace the door seal. The heat exchanger insulation (boiler bottom and door) cannot be changed if they are damaged. The door seal must be replaced at least every two years.

Refer to the exchanger cleaning technical note for more information.

16.4 Electrode check

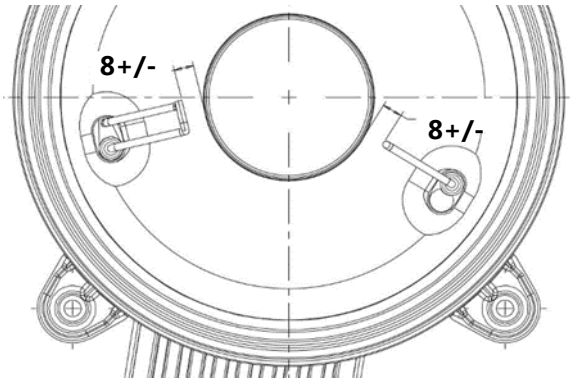

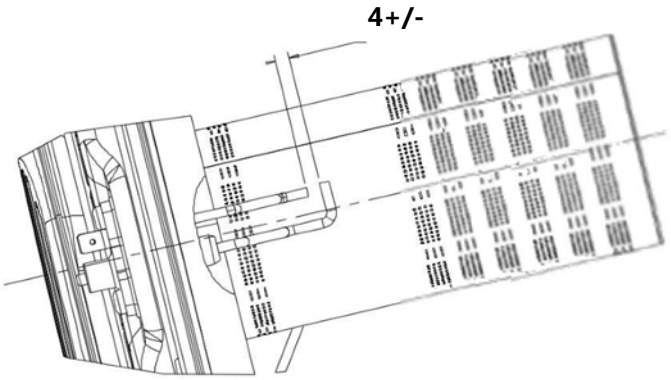

Check the electrodes at least once every year.
Replace the electrode and seal if any damage is found. Check the distance between the ignition electrode (4 +/- 0.5 mm) and the distance of the electrodes from the burner (8 +/- 1 mm).

16.5 Combustion check

Check combustion at least twice a year or more if necessary. Carry out this check on each boiler one by one .

16.6 Checking the condensate treatment system and boiler drain

Check the condensate treatment system and drains at least twice a year or more if necessary.
A routine check is needed because any clogging can cause condensate to rise into the combustion chamber and as a result deteriorate the boiler insulation. It will also be important to check the effectiveness of the pellets used to determine the pH value before sending to the drains. This value must be higher than pH 5.

17. RECOMMENDATIONS TO USERS

Safety rules

- It is prohibited to close off and/or reduce the boiler compartment ventilation openings.
- Never close off the exhaust gas flue and fresh air intake.
- Never make any changes to the settings made by the qualified professional.
- Never touch hot and/or moving parts on the appliance.
- Do not place or hang any objects on the appliance.
- All work on the appliance is prohibited until it has been disconnected from the electricity supply and the until the gas supply has been cut.
- Do not change the type of gas used, the appliance settings, the safety or control systems, as this could create hazardous situations.

Notify the after-sales technician if there is a change of gas, gas pressure or a change in the power supply voltage.

In the event of a long period without use, disconnect the power supply from the appliance. When restarting the system, it is recommended to use qualified personnel. In general, all repair or maintenance work must only be carried out by authorised and qualified personnel.

It is strongly recommended to sign a maintenance contract.

PROBLEMS	SOLUTIONS
Smell of gas	- Close the external gas valve and the power supply then notify the maintenance technician.
The burner is safe	- Reset the burner from the control panel. - If the problem persists, contact the after-sales technician.

What to do if there are problems:

18. PARTS LIST

MCHRT250 General module parts list

The MCHRT module can be used in different configurations. In all cases, the use of the thermal module is subject to the presence of safety devices. Refer to the manual for each product for more information.

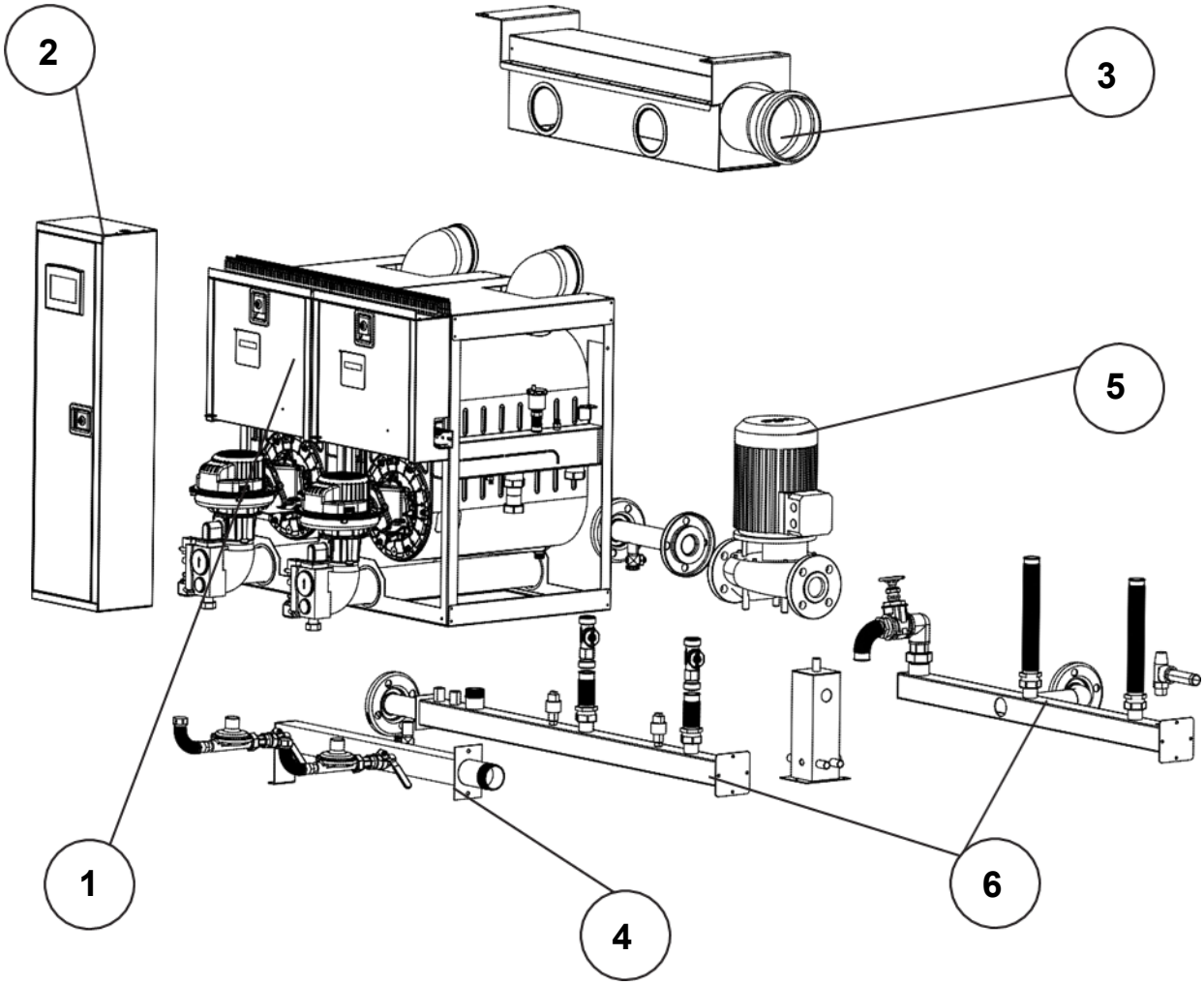

N°	NAME	QTY
1	CH 125 BOILER	2
2	ELECTRIC CABINET	1
3	CASCADE EXHAUST GAS FLUE	1
4	GAS MANIFOLD	2
5	CIRCULATION PUMP	1
6	FLOW AND RETURN MANIFOLD ASSEMBLY	

MCHRT375 General module parts list

The MCHRT module can be used in different configurations. In all cases, the use of the thermal module is subject to the presence of safety devices. Refer to the manual for each product for more information.

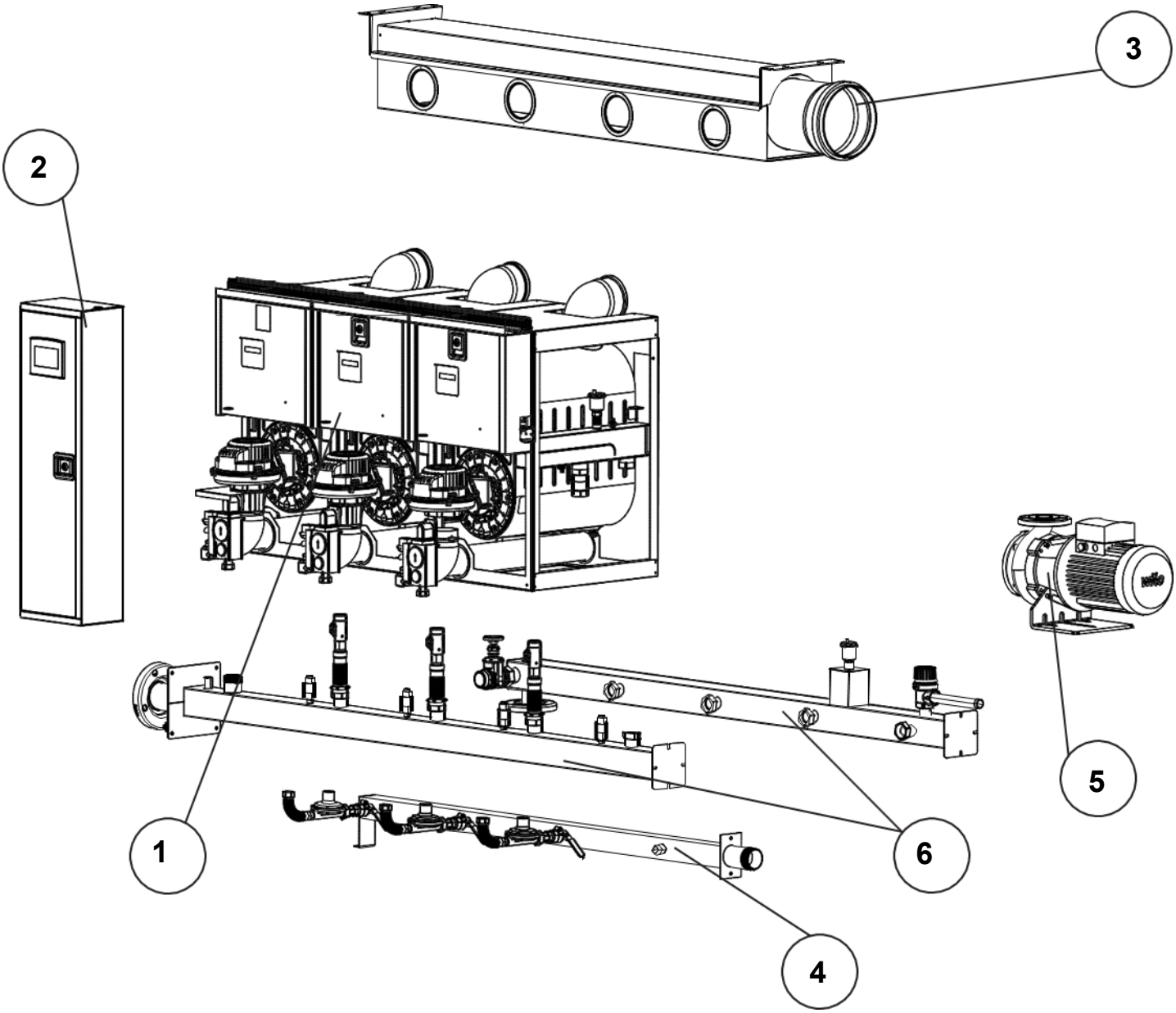

N°	NAME	QTY
1	CH 125 BOILER	3
2	ELECTRIC CABINET	1
3	CASCADE EXHAUST GAS FLUE	1
4	GAS MANIFOLD	4
5	CIRCULATION PUMP	1
6	FLOW AND RETURN MANIFOLD ASSEMBLY	

MCHRT500 General module parts list

The MCHRT module can be used in different configurations. In all cases, the use of the thermal module is subject to the presence of safety devices. Refer to the manual for each product for more information.

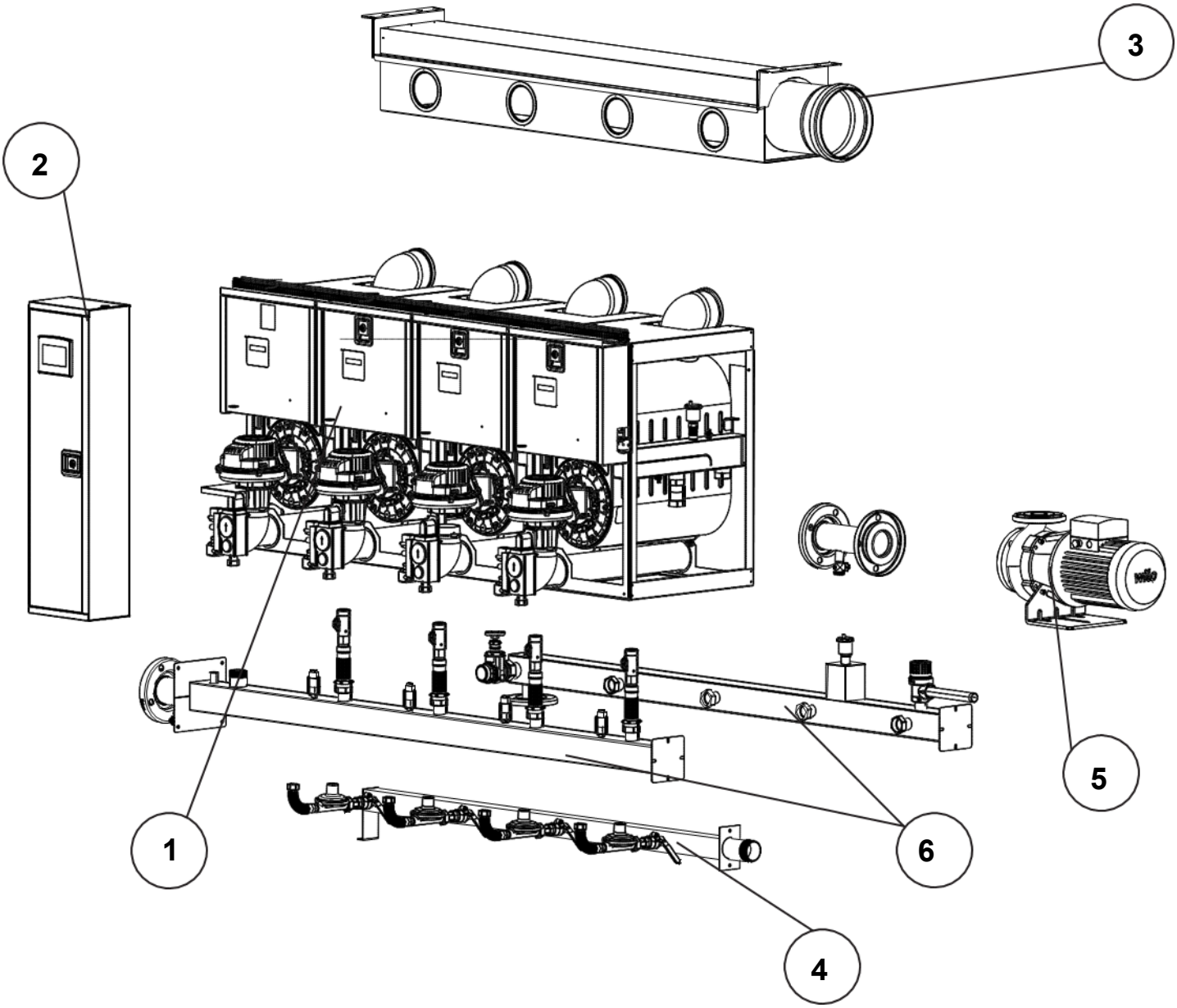

N°	NAME	QTY
1	CH 125 BOILER	4
2	ELECTRIC CABINET	1
3	CASCADE EXHAUST GAS FLUE	1
4	GAS MANIFOLD	4
5	CIRCULATION PUMP	1
6	FLOW AND RETURN MANIFOLD ASSEMBLY	

Thermal module parts list

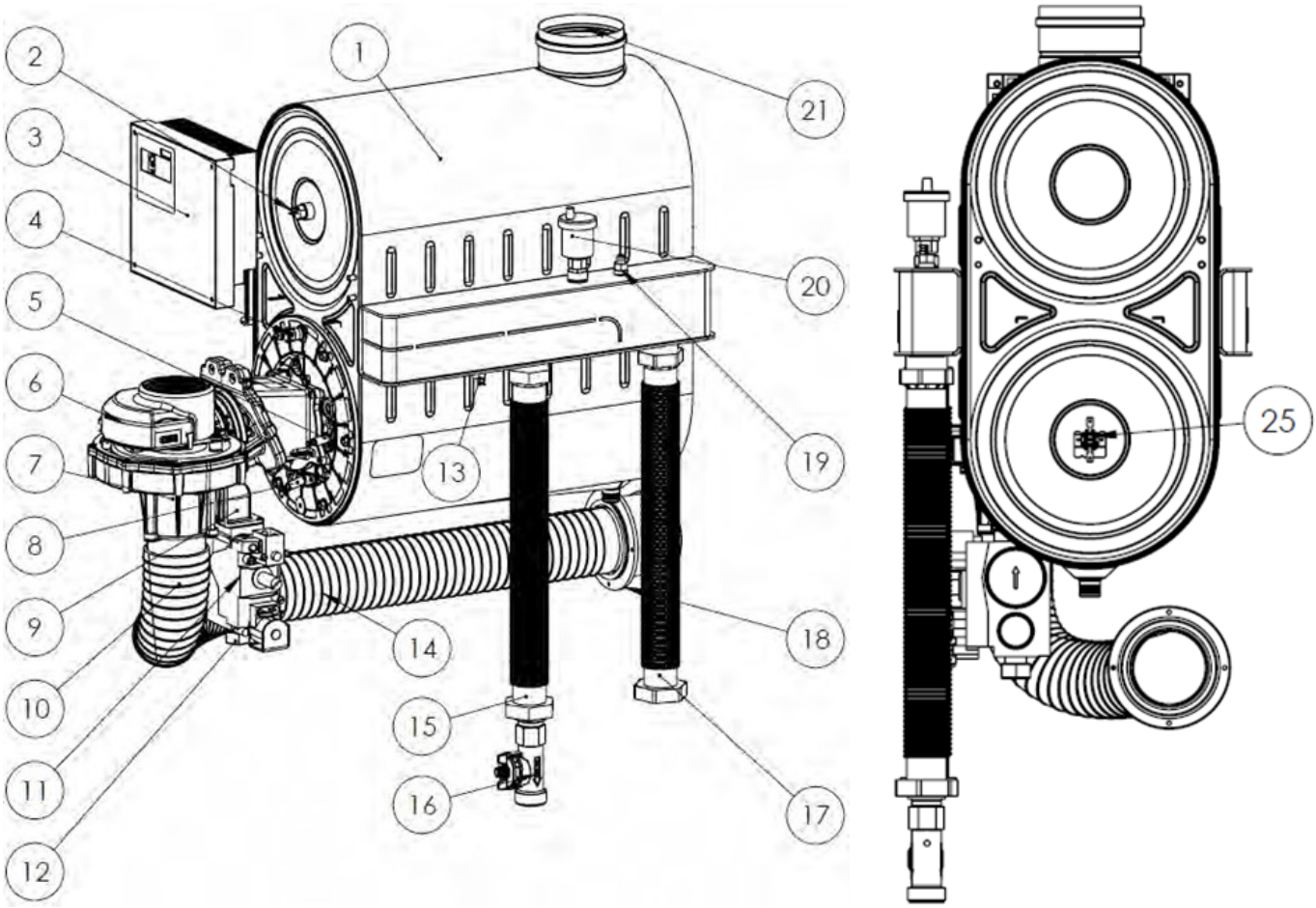

N°	NAME	QTY	REFERENCE
1	HEATING ELEMENT 12+6	1	UTC0125
2	BURNER COMBUSTION GAS TEMPERATURE SENSOR	1	ELE0164
3	CONTROLLER PANEL+FACADE	1	REG240
4	LIMIT TEMPERATURE SENSOR	1	ELE0161
5	IGNITION ELECTRODE + SEAL	1	UTC0134 + UTC0133
6	BURNER FAN	1	UTC0424
7	AIR/GAS MIXER	1	UTC0404
8	IONIZATION SENSOR + SEAL	1	UTC0136+ UTC0135
9	90° MIXER ANGLE + GASKETS (x2)	1	UTC0405
10	COMBUSTION AIR DUCT	1	NC
11	GAS SOLENOID VALVE	1	GAZ0020
12	2P MF 1/2" 3/4" CONNECTION	1	ATE115+ATE115B
13	FLOW WATER TEMPERATURE SENSOR	1	ELE0284
15	WATER HOSE 1"1/2 F x 1"/1-4 F 370mm	2	FLEXIND105
16	WATER FLOW METER DN25 1"-1/2	1	UTC0574
17	WATER HOSE 1"1/2 F x 1"/1-4 F 370mm	2	FLEXIND105
19	RETURN WATER TEMPERATURE SENSOR	1	ELE0284
20	PLUNGER AIR VENT	1	PB400
21	BOILER EXHAUST GASKET	1	NC
25	THERMAL FUSE	1	UTC0128
	SAFETY VALVE 4 BARS 1/2" F/F	1	UTC0570
	WATER PRESSURE SENSOR	1	ATE455

Burner parts list

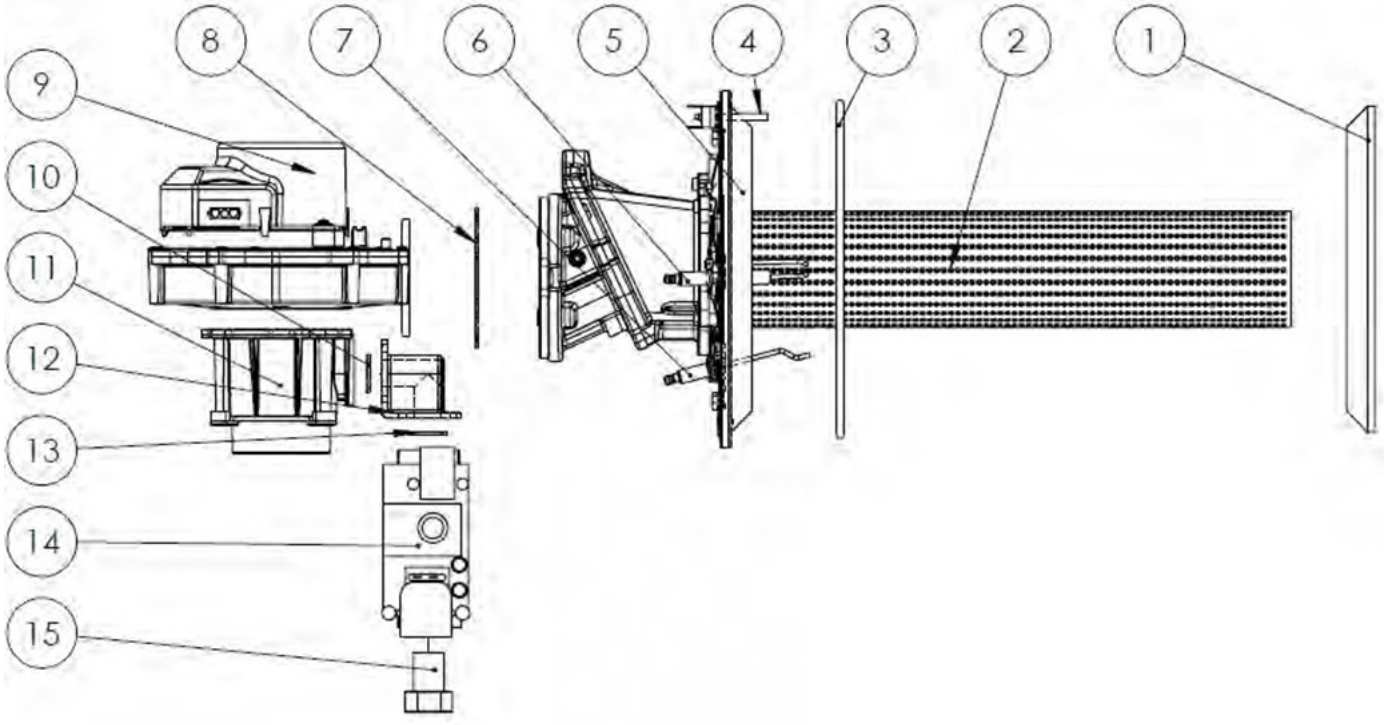

N°	NAME	QTY	REFERENCE
1	DEFLECTOR INSULATION	1	UTC0127
2	BURNER SUPPORT, BURNER and FLAPPER VALVE	1	NC
3	BURNER DOOR SEAL	1	UTC0131
4	DOOR THERMOSTAT	1	UTC0129
5	BURNER DOOR INSULATION	1	UTC0130
6	IGNITION ELECTRODE + SEAL	1	UTC0134 + UTC0133
7	IONIZATION SENSOR + SEAL	1	UTC0136+ UTC0135
9	BURNER FAN	1	UTC0424
10/13	MIXER ANGLE GASKET	2	NC
11	AIR/GAS MIXER	1	UTC0404
12	MIXER 90° ANGLE	1	UTC0405
14	GAS SOLENOID VALVE	1	GAZ0020
15	2P M/F 1/2’-3/4’ CONNECTION	1	ATE115+ATE115B

Caution, always use original manufacturer parts

YAHTEC

36 RUE PASCAL

77100 MEAUX

Site : www.yahtec.com

Mail : info@yahtec.com