Installation and maintenance manual

CE 1312BO3933

Outdoor indirect gas heater
ATLX 55 & 85

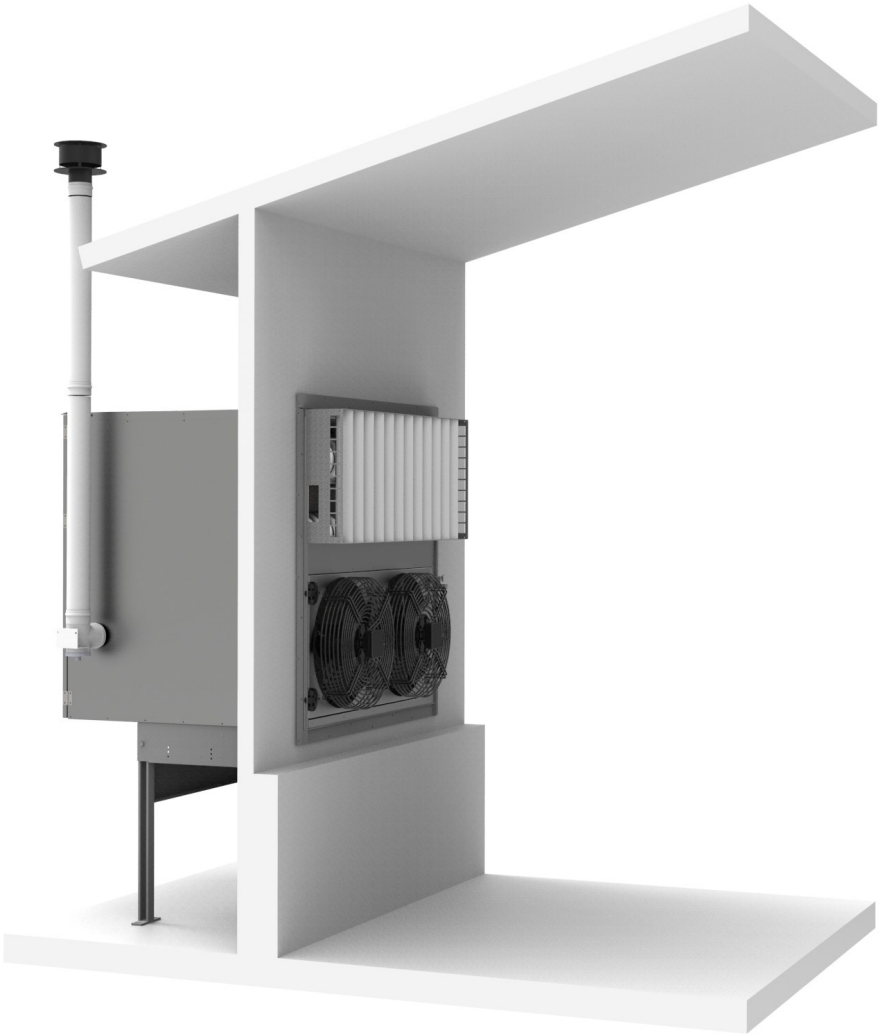

DTC25-070EN

TABLE OF CONTENTS

Section No.	Section	Pages
1	**GENERAL INFORMATION** 1-1 General recommendations 1-2 Unit description 1-3 Instruction for use 1-4 Operating 1-5 Safety	5 à 6
2	**TECHNICAL SPECIFICATIONS** 2-1 Performance of gas heater ATLX 2-2 Dimensions	7
3	**INSTALLATION** 3-1 Recommendations for the installation 3-2 Assembly	8 à 9
4	**ELECTRICAL CONNECTION** 4-1 Electrical diagram 4-2 Electrical connection 4-3 Communication modes	10 à 15
5	**COMBUSTION SETTINGS** 5-1 Changing gas 5-2 Selection table for nozzles and gas pressure	16 à 17
6	**COMMISSIONING AND SETTINGS** 6-1 Checks before commissioning 6-2 Commissioning 6-3 Control board use 6-4 Control board settings	18 à 21
7	**FLUE PIPE CONNECTION** 7-1 Generalities 7-2 Single flue kit connection	22
8	**GAS CONNECTION** 8-1 Generalities 8-2 Connection	23
9	**BILL OF MATERIALS**	24
10	**MAINTENANCE**	25
11	**TROUBLESHOOTING**	26 à 27
12	**RECOMMENDATIONS FOR USER**	28

© Copyright
This range of products are constantly being updated and refined. We reserve the right to change our products and their relevant technical data contained in this publication at any time and without prior notice.

AVERTISSEMENT

CE marking

This equipment complies with the essential requirements of Regulation (UE) 2016/426 « Gas devices ». It is registered under the No.1312BO3933 on the 12th of September 2019, standards EN1020:2010.
The devices in this manual comply also with following directives:

- Low voltage 2014/35/UE
- Electromagnetic compatibility 2014/30/UE

Responsibility

This equipment must be used expressly for the purpose for which ***YAHTEC*** has designed and manufactured it. Any contractual liability of ***YAHTEC*** is therefore excluded in case of damage undergone by persons, animals or goods, following errors in installation, settings, maintenance and inappropriate use.
The devices must be equipped exclusively with genuine accessories. ***YAHTEC*** will not be held responsible for any damage whatsoever arising from the use of an accessory which is inappropriate to the device.
The devices must be installed by qualified professional workers, respecting the regulations and decrees in force, and in accordance with the instructions shown in this instruction manual. The installer is required to establish installation conformity certificates produced by the ministries responsible for the construction and safety of gas. References to standards, rules and directives mentioned in this manual are given for information purposes and are only valid at the date of printing this manual.
YAHTEC is responsible for the conformity of the device to the rules, directives and standards of construction in force at the time of marketing. Knowledge and respect for the legal provisions as well as the standards inherent in the design, implantation, installation, commissioning

Reception – Storage

The gas unit heater is delivered on a wooden pallet, protected by cardboard packing and a plastic film. It is essential to check the condition of the equipment delivered (even if the packing is intact) and its conformity compared to the order.
In case of damage or missing parts, you must report the observations on the transport company's receipt form in the most precise way possible, "subject to unpacking" has no legal value, and then you must confirm those reservations by registered letter within 48h to the transport company. We remind you that it is the responsibility of the buyer to check the delivered merchandise, no recourse will be possible if this procedure is not respected.
Store the equipment in a clean and dry room, away from shocks, vibration, divergences in temperature and in an ambient environment with a rate of hygrometry lower than 90%.

Guarantee

Your device benefits from a contractual guarantee against any manufacturing defect, the duration of that guarantee is shown in our catalogue.
Our liability as a manufacturer cannot be committed when incorrect use of a device has occurred, where there is a defect or of an insufficiency in the maintenance of that device, or an incorrect installation of the device (it is your responsibility, as regards this, to check that the latter is carried out by qualified professionals).
In particular we will not be held responsible for material damage, intangible losses or bodily injury resulting from an installation which does not conform:
- to the legal and regulatory provisions or those imposed by local authorities,
- to the national or local or particular provisions governing the installation,
- to our instructions and recommendations for installation, in particular the regular maintenance of the devices,
- to the rules of the trade.

Our guarantee is limited to the exchange or repair of only those parts which are recognised as being defective by our technical departments, excluding the cost of labour, travel and transport.
Our guarantee does not cover the replacement or repair of parts as a result of, in particular, normal wear, incorrect utilisation, service visits by unqualified third parties, a defect in or insufficiency of maintenance or surveillance, non-conforming electrical supply and the use of a fuel which is inappropriate or of bad quality.
Sub-assemblies, such as motors, pumps, electric valves, etc…, are only guaranteed if they have never been removed.
The rights established under the European directive 99/44/CEE, transferred by the legislative decree No. 24 of 2 February 2002 published on the Official Journal No. 57 of 8 March 2002, remain valid.

PLEASE READ CAREFULLY BEFORE CONTINUING

This technical manual must be kept in good condition inside the unit.

THIS PRODUCT IS EXCLUSIVELY RESERVED FOR A PROFESSIONAL USE. ONLY QUALIFIED PERSONS ARE ALLOWED TO HANDLE IT. IT CANT BE ACCESSIBLE TO THE PUBLIC.

The specifications, illustrations and description contained in this manual are, to our knowledge, accurate at the time of the approval to print. We reserve the right to stop offering some characteristics or to stop the production of a model without notice it, do not constitute an firm agreement of our share.

Safety rules

- DO NOT SPRAY AEROSOLS IN THE VICINITY OF THIS APPLIANCE WHILE IT IS IN OPERATION.
- DO NOT USE OR STORE FLAMMABLE MATERIALS IN OR NEAR THIS APPLIANCE.
- DO NOT PLACE ARTICLES ON OR AGAINST THIS APPLIANCE.
- DO NOT MODIFY THIS APPLIANCE.
- It is forbidden to plug and/or reduce the aeration openings of the installation room or the device,
- Never obstruct the smoke evacuation or the new air intake,
- Never make any modifications to the settings made by qualified personnel,
- Never spray water on the unit heater, or touch the device with parts of the body which are wet and/or with naked feet,
- Never touch hot parts of the unit heater, and/or moving parts,
- Never put or hook any object onto the device,
- Any operation on the device is forbidden unless it has been disconnected from the electricity network and the gas supply has been cut off.
- Do not modify the type of gas used, the settings of the device, the safety systems and regulation systems, since that could create dangerous situations.

Warn the after-sales technician in the case of changing the gas, the gas pressure or modifying the supply voltage.

In the case of a long period of non-operation, disconnect the electrical supply from the device. When starting the operation again, you are advised to call on qualified personnel. As a general rule all repair and/or maintenance visits must be carried out exclusively by authorised and qualified personnel.

A maintenance contract is strongly recommended, ask your installer.

Cautionary note

Electrical components, drive mechanism and combustible gas can cause injuries. To protect from those risks during the installation or the maintenance, the power supply must be cut and the gas valve closed. Any person involve in the installation or maintenance of this equipment must respect the health and safety standards.

What should you do if you detect a gas smell :

- Close the outside gas valve and the electrical supply then, inform a technician for maintenance.
- Do not try to switch on the device
- Do not switch on the power supply, do not use phone inside the building.
- Call your gas supplier from another phone. Follow the instructions given by your supplier.
- If you cannot contact them, call the fire department.

1-GENERAL INFORMATION

1-1 General recommendations

The gas heater ***ATLX*** range are intended for the heating of industrial premises and poultry houses, for outdoor use.

The unit can only be installed in rooms which are sufficiently ventilated, except if it has a sealed connection.
The proper functioning of the gas heater depends on correct installation and commissioning.
Installation and maintenance must be carried out by qualified personnel in conformity with the regulatory texts and the rules in force.
The non-compliance with such rules entails the rejection of all responsibility from the manufacturer.

DO NOT INSTALL GAS HEATERS IN :

- Rooms which have a risk of explosion,
- Rooms containing chlorinated combination steam,
- Rooms with a high content of combustible dust,
- Rooms which are excessively humid (electrical danger),
- Corrosive environment
- Domestic premises

After having checked that the installation respects the recommendations of this notice, it is the responsibility of the installer:

1) to inform the user:
- that it cannot carry out itself any modifications to the design of the devices or the method of carrying out the installation; the least modification (exchange, withdrawal....) of safety components or parts which influence the efficiency of the device or the hygiene of combustion will systematically cause the withdrawal of the EC marking.
- that it is necessary to recommend cleaning and maintenance operations.
An annual preventive maintenance operation is compulsory.
2) to give these instructions to the user. They form an integral part of the device and must be retained and must accompany the device, even in the case of sale to another owner or user.

Being always intent on improving the quality of our products, we seek to improve them on a permanent basis. We therefore reserve the right, at any moment, to modify the specifications shown in this document.

1-2 Description of equipment

The gas heater ***ATLX*** is an independent hot air generator, running on natural gas and on propane.

It constitutes a "direct" heating gas system ; it is a device for the production and the emission of heat without an intermediate vehicular fluid. For the whole range described in these instructions, the combustion products are evacuated out of the room by an extractor. The combustible air is taken from the ambient environment or from outside. Those units can be connected with single flue kit, B22 type.

The gas heaters of the **ATLX** range work with different gas indicated on the identification plate in conformity with the European directive.

1-3 Instruction for use

- Please read the instructions in this manual carefully for the operation and maintenance of this device.

- Carry out maintenance at least once a year by qualified personnel. The frequency of the maintenance operations depends on the environment in which the device is installed. More regular inspection must be carried out in dusty locations.

- If the unit is used in poultry houses, it must be cleaned after each lot of animals, or more if there is a high degree of pollution.

- Regularly check that device, the chimney or the gas pipe are not damaged.

- Regularly check that air openings in the building and around the device are not obstructed.

- Check that hot air circulates normally in the room, and therefore that there is no obstacle on the suction side (fan side), and in front of the blowing side of the unit (check that the grille is well opened).

- The control box must have a cut off electricity each 24 hours.

- For the devices working with LPG, please note that it is not recommended to go down below 1/4 of the tank level. Certain additives used in LPG can accumulate and stagnate at the bottom of the tank and cause a premature fouling due to bad combustion. In case of consecutive failure due to a lack of gas, it is mandatory to check the cleanliness of the combustion circuit and to realize a combustion control at the commissioning.

1-4 Operation

When heat is required, the burner ignites using the ignition electrode then the fan starts running, hot air is blown into the room. When the setting temperature is reached, the burner is turned off. The fan continues to turn for about one minute, until it has cooled the heat exchanger.

If the power supply is disconnected, the unit stops (burner and fans).
When the power supply returns and there is an heating demand, the unit restarts. If the unit do not restart and its display shows “overheating error”, reset the unit by pressing the overheating thermostat button (refer to the bill materials page 24 item No.19). Indeed, if the temperature inside the heat exchanger compartment goes over 100°C, the unit goes to overheating safety.

1-5 Safety

- The ionization sensor detects if there is a flame or not. If not, the gas vales are immediately closed.
- The thermal protection of the heat exchanger is ensured by two thermostats. The first, which is automatically reset, protects against insufficient air flow (obstructions, fan failure). The second, which has to be manually reset, is set to a higher threshold than the first one. It protects the device against overheating due to a functioning problem or unsuitable use.

If the operation shows any difficulty whatsoever, please contact your installer or the After Sale Service of your dealer.

Make sure that the device can be normally supplied with combustion air at atmospheric pressure (it must be taking into account if there is any modification of the building after the installation of the device). An excessive vacuum inside the room can harm the proper functioning of the device and deprive it of air necessary combustion.

2– Technical caracteristics

ATLX Model

The ***ATLX*** heaters are equipped with an axial fan for a direct blowing into the room.

It is designed to be installed outside or inside a room to heat.

It is equipped in series with 2-stages solenoid gas valve to meet as much as possible the heating needs.

2-1 Performances

TYPES		ATLX55	ATLX85
Gas Input	kW	51.7	84
Nominal Output (Prated,h)	kW	48.1	78.5
Efficiency at Nominal heat output (ηnom)	%	92.9	93.4
Minimal power (Pmin)	kW	33.9	55
Efficiency at minimal power (ηpl)	%	94	96
Fan	Ø [mm]	1x Ø450	2x Ø450
Speed rotation	RPM	1350	1350
Air flow at 15 °C	m3/h	4800	9 000
Gas flow at 15°C Natural G20 Groningen G25 Propane G31	20 mbar 25 mbar 37 mbar	5.3 m3/h 5.9 m3/h 3.9 kg/h	8.6 m3/h 9.5 m3/h 6.6 kg/h
Smoke exhaust diameter	Ø [mm]	80	80
Supply voltage	Monophasée 230 Volts / 50 Hz - IP23		
Electrical power	W	670	990
Electrical current	A	3	4,5
Electrical Consumption (Blowing fan excluded)			
At Nominal heat output (elmax)	kW	0.14	0,14
At Minimal power (elmin)	kW	0.1	0,1
Operating temperature	°C	0 °C* / +40°C	
Weight	kg	188	224

2-2 Dimensions

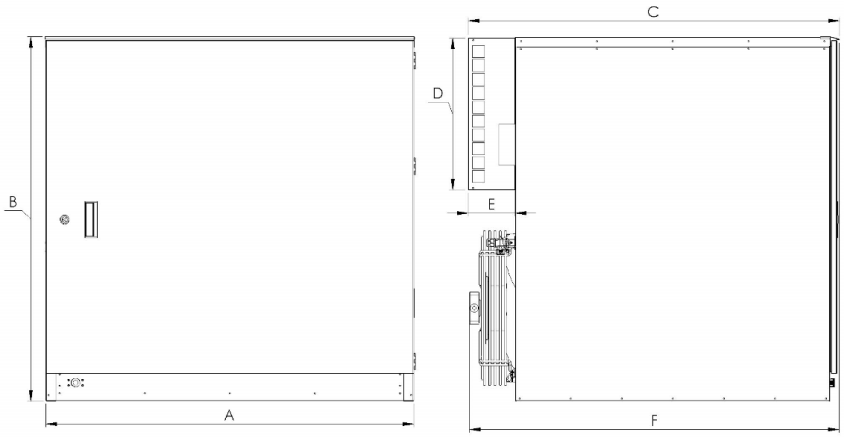

Types	ATLX55	ATLX85
A (mm)	740	1120
B (mm)	1110	1110
C (mm)	1130	1130
D (mm)	462	462
E (mm)	145	145
F (mm)	1125	1125
Fumes (mm)	Ø 80	Ø 80
Gas (mm)	3/4'' M	3/4'' M

3– INSTALLATION

3-1 Recommendations for the installation

For a good functioning and the security of the device, it is imperative to respect some installation rules :

- Remove any packaging / protective films from the appliance.
- Make sure the stand is strong enough.
- Keep enough distance between the device and any obstructions.
- Do not obstruct the access doors to the technical compartments, take into account the possibility of opening the access for maintaining and cleaning operations.
- Be careful to every flammable products. Ensure you that the air flow to and from the heating device is without obstruction, and the warm air can freely flow.
- No object can be placed at less than 5 m around the heater.
- The device is delivered with M8 fixation points, check the technical drawings.
- Make sure that, after assembly, there is no mechanic tension on the gas or electric connection.
- Make sure that the flues pipes are enough cleared for correct operation, see chapter concerned.
- For a long use with low outside temperatures (under 0°C) we recommend to add an anti-freeze kit inside the technical compartment and a heating wire inside the siphon to facilitate the evacuation in case of condensates.
- Install the device perfectly horizontally.

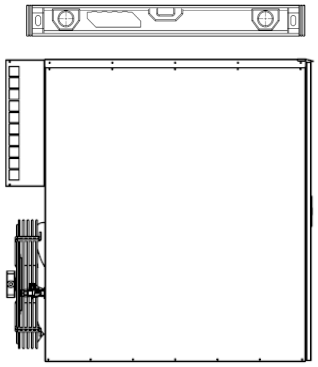

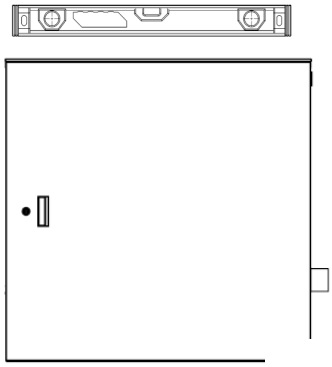

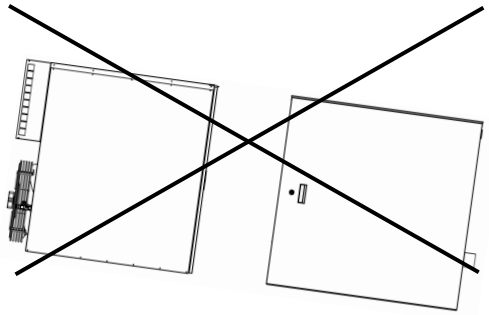

- Test the operation of the appliance after installation.

Dimensions for installation:

It is possible to pass the cables or linkage of ventilation windows, in front of the device:

- Behind the diffuser, through an adapted hole (125x50)
- Between the diffuser and the fans.

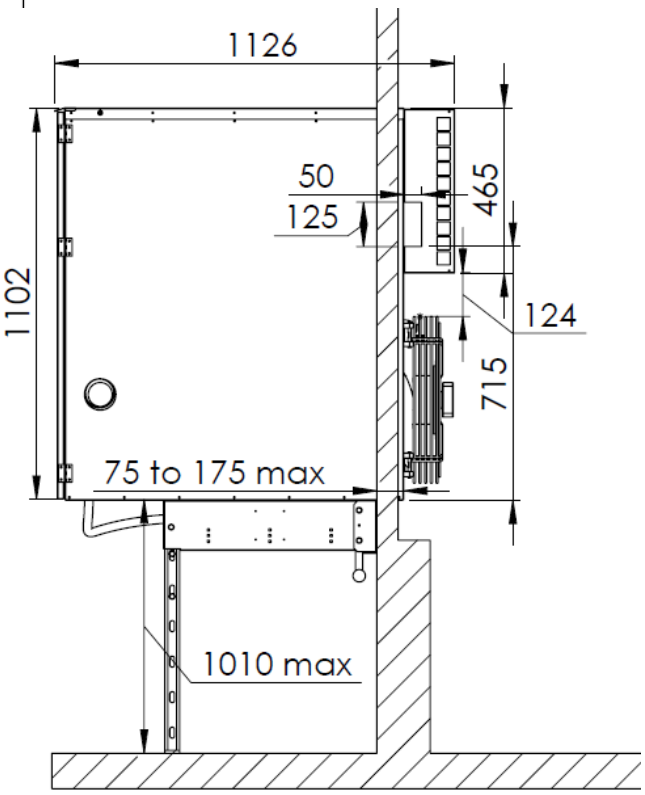

3-2 Assembly

- Make an opening in the wall but keep a minimum space to slide the device in this opening. Be careful to respect the clearance dimensions.

- Put the sheet steel base of the support on the wall and fix the 2 sheet steel on the both sides of the sheet steel base.

- Mount the support feet and adjust the height (refer to the installation manual). Make sure that the support feet are placed in a permanent hard surface, be careful with soft soil (mud, sand, etc.)

- Fix the sheet steel between the support feet in order to get a rigid set, check the levels of the bracket, the set must be perfectly horizontal.

- Place the unit on the support and slide it to the correct position by respecting the clearance sides.

Fix the device on the bracket with two screws placed under the lateral sheet steel.

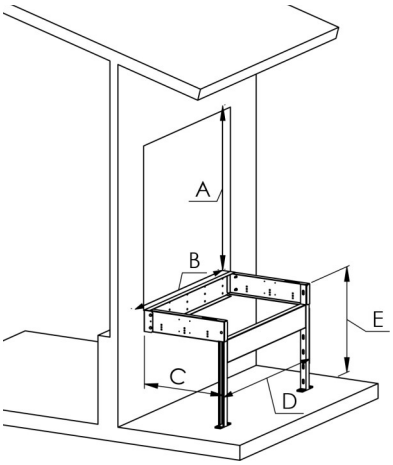

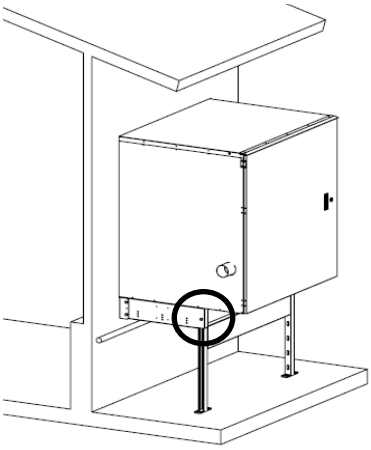

	ATLX55	ATLX85
A	1120	
B	750	1130
C	600	
D	750	1130
E	1010 max	

Dimensions of installation

Indoor view

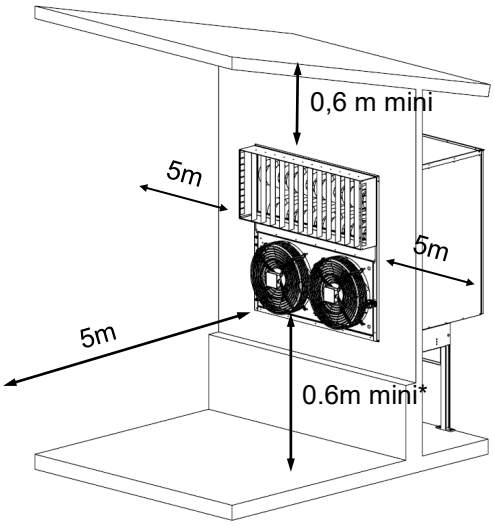

Outdoor view

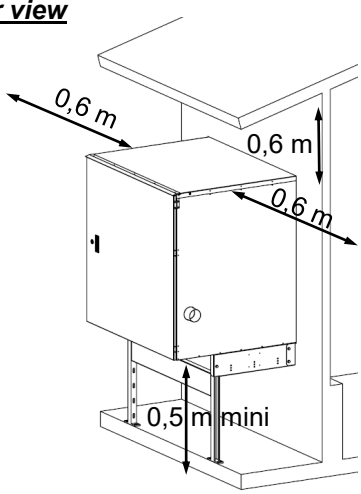

- Cover the perimeter of the device, both inside and outside the wall. Be sure of the sealing of the assembly by applying a sealing paste adapted to the material and weather conditions.

- Caution, if the slope of the roof ends over the device, make sure to place a gutter. The rainwater cannot flows on the device!

(*) This height must be checked depending on the type of husbandry or the configuration of the local.

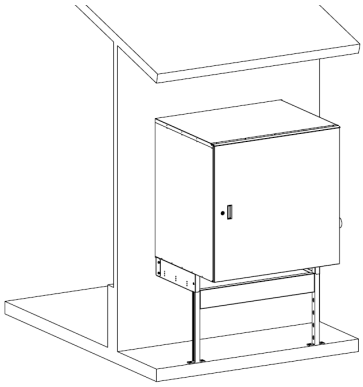

4– ELECTRICAL CONNECTION

Caution, before any action, make sure that the electricity is cut off, to avoid any electrocution risk. These actions must be realised by a qualified person with the required qualifications.

4.1 Electrical schematics of ATLX :

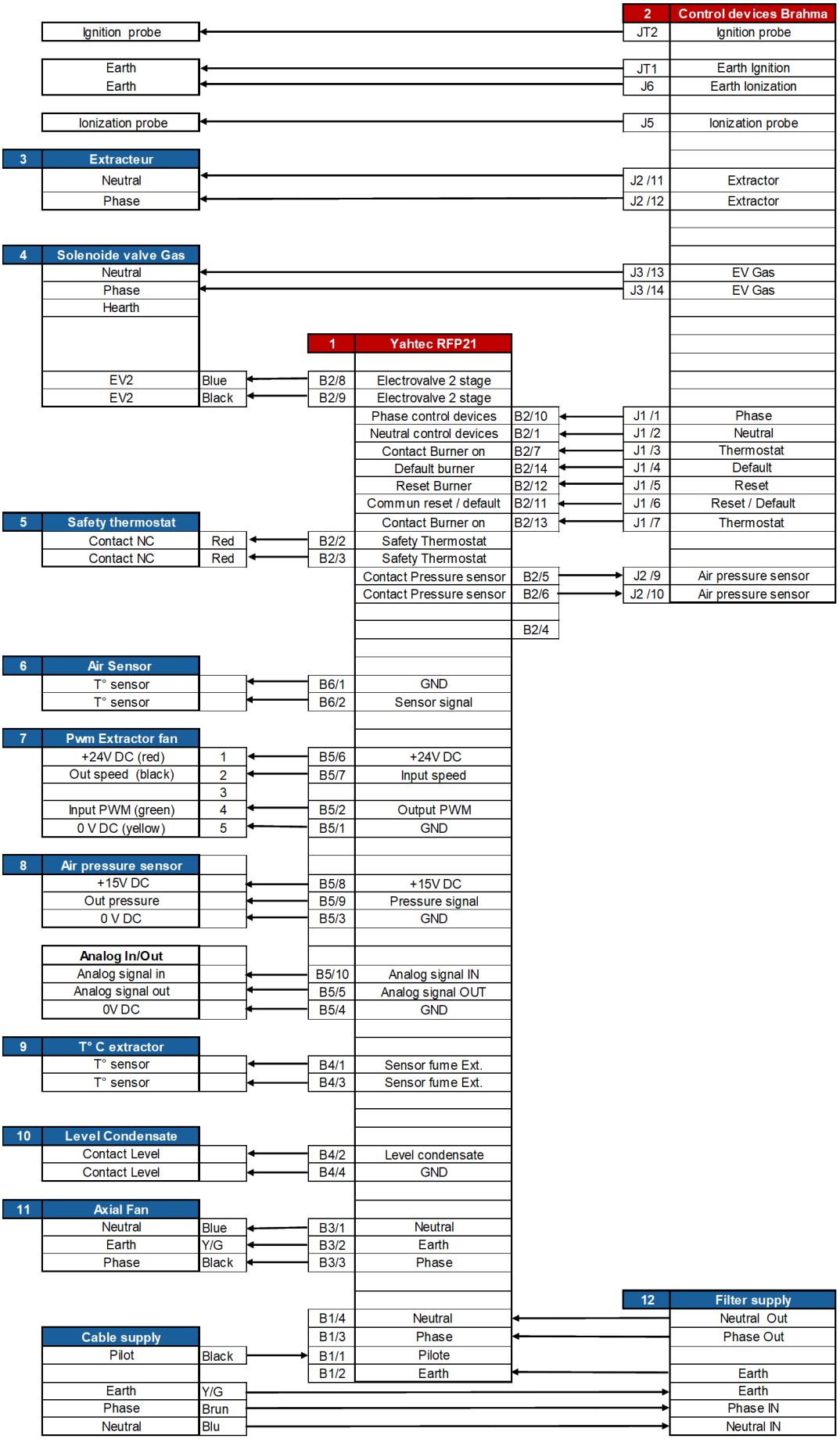

4.2 Electrical connections between heater's components :

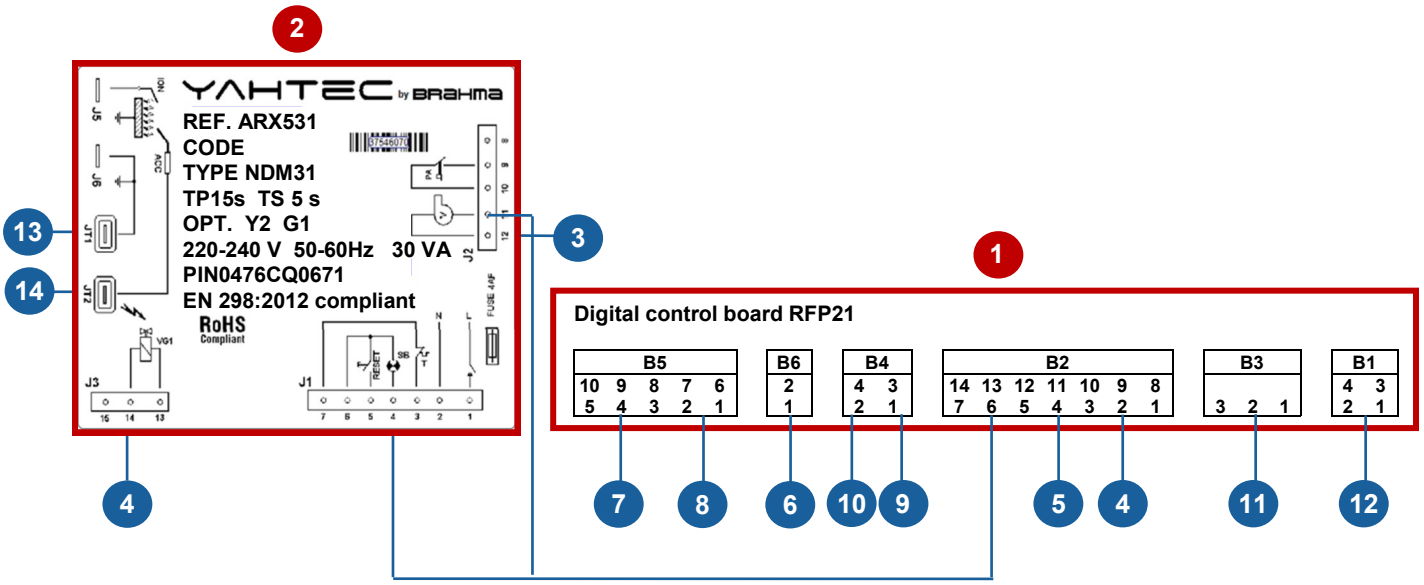

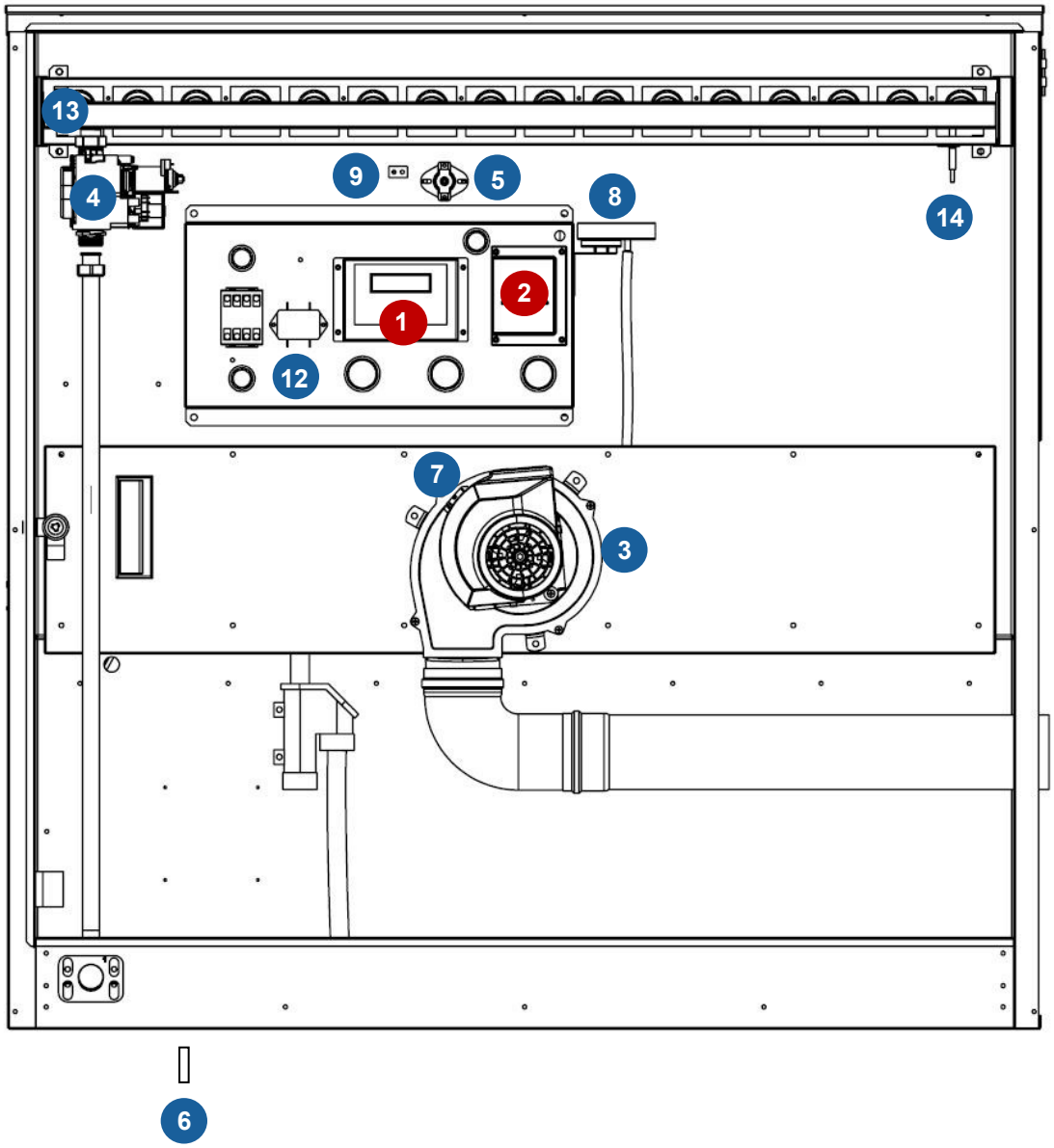

4.3 Communcation modes :

The ATLX indiect gas heater can work with three modes of communication :

- Analog mode: 0/10Volts
- Pilot wire mode

You can choose the communication mode you want on the control board display as following:

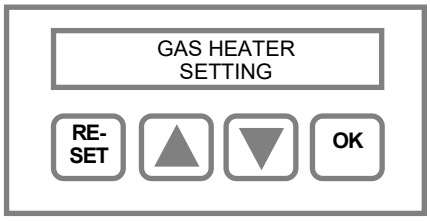

From the home page, go to the page «Gas heater setting». Press 5 seconds on « OK » to open the menu and go to the page « MODE PILOTE WIRE » by pressing ▲

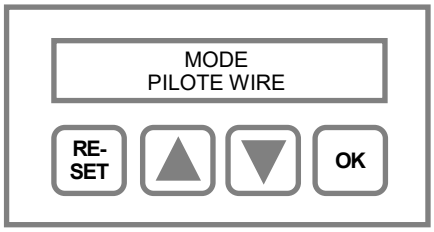

From the page “Mode” press « OK ». Select the communication mode you need by pressing ▲. You can select “PILOT WIRE” or “0-10V”.

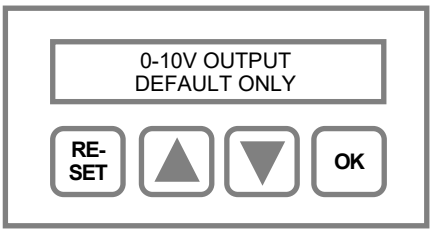

If you are using the mode “PILOTE WIRE” with an integrated diod bridge, you can have a fault return thanks to 0-10V output.
To get this feature, go to the menu “0-10V Output”, press “OK” and select “DEFAULT ONLY”. You will need also to add a relay (consult us).
If you are not using the mode “PILOTE WIRE” with diode bridge or if you are using 0-10V signal, select « ALL DATA ».

Working principle for pilot wire mode (ON/OFF):

With the ON/OFF or pilot wire modes, the heater switches automatically to high or low power according to the outdoor temperature. The factory setting for the switch is 10°C and can be adjusting from 10 to 30°C. If the outside temperature is over 10°C, the heater operates at minimum power, if the outside temperature is under 10°C, the heater operates at maximum power.

The software includes an automatic temporization switch from low power to high power. The factory setting is 10 minutes (operating range: 10 to 30 minutes).
If the heater is working in low power for more than the setting value (10 minutes), it will automatically switch to high power until it reaches the requested temperature and stops. Then, the heater will restart in maximum or minimum power according to the outdoor temperature.

Working principle for 0-10 Volt mode:

With the 0-10 Volt signal, you can send the order of high power or low power according to your needs.
The automatic mode can also be used with 0-10V signal, which is the same as for the pilot wire mode; it will operate in high or low power depending on the outside temperature (factory setup : 10°C).

4.4 Electrical schematic for Pilote wire mode

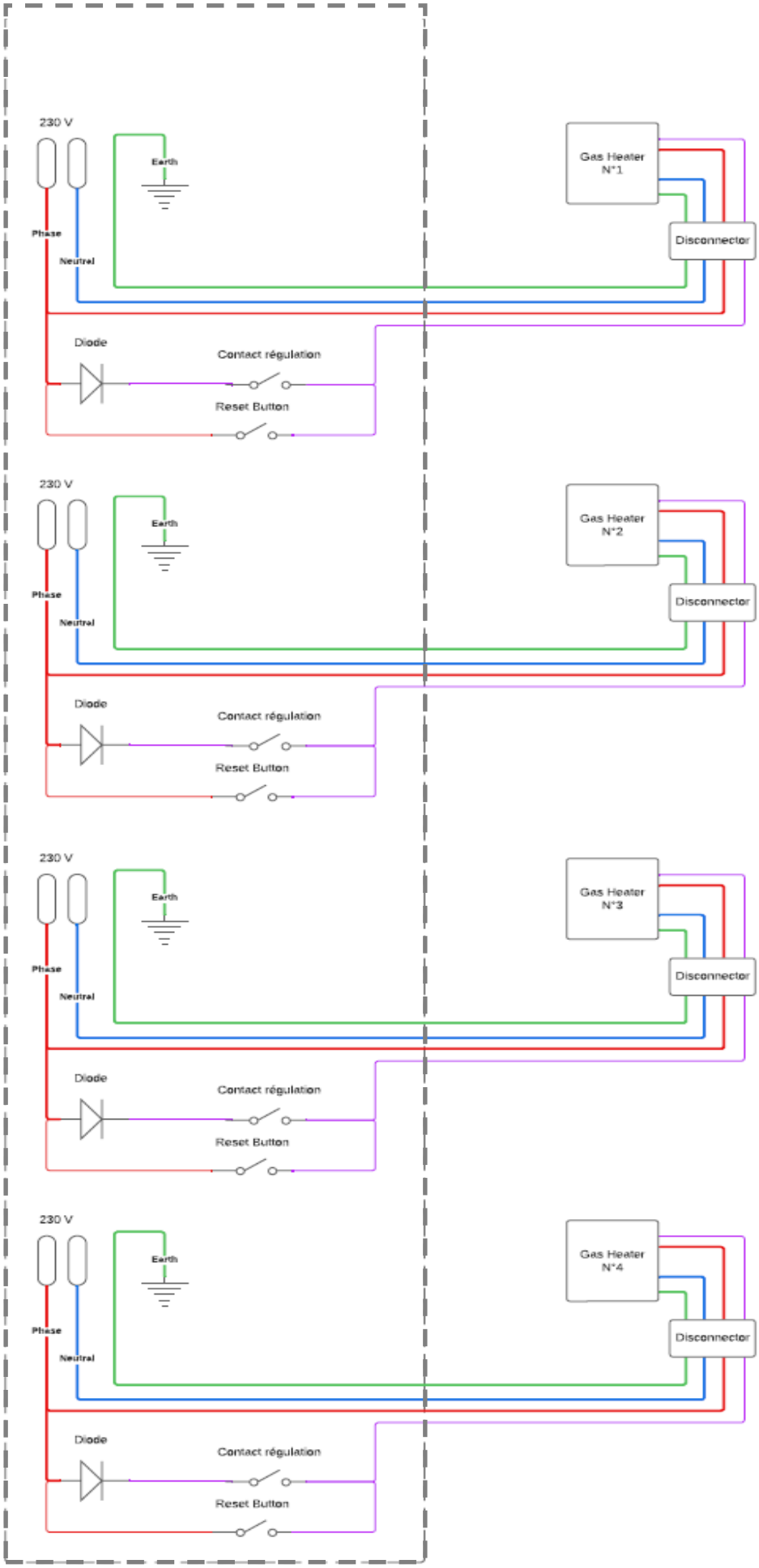

4.5 Electrical schematic for 0-10 Volt mode

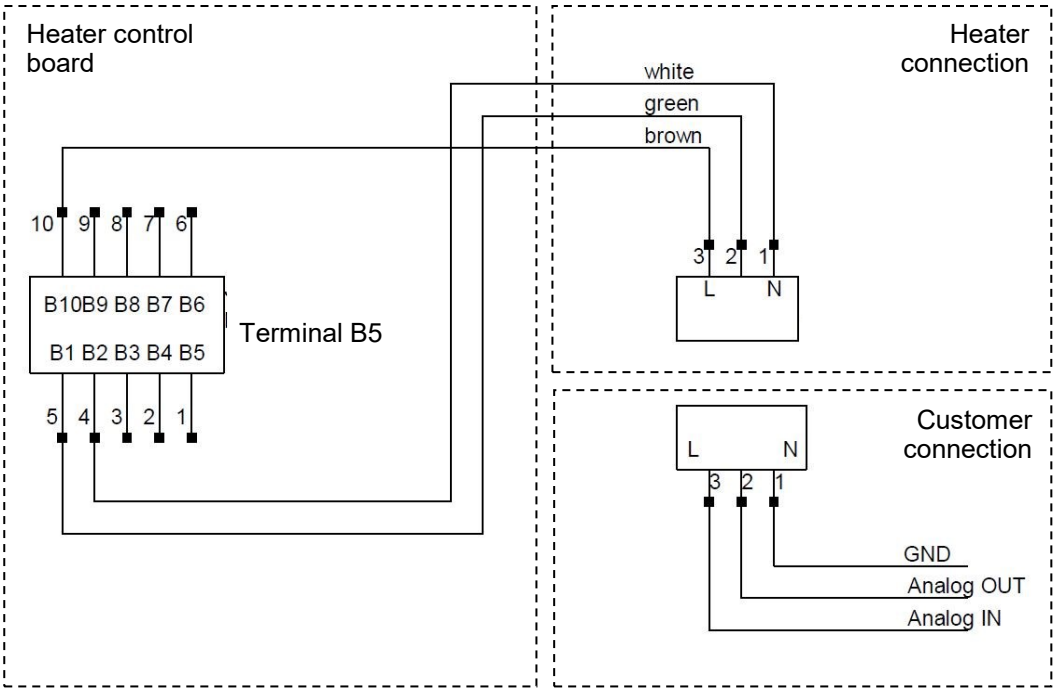

The unit can receive the following informations via IN signal 0-10V
(The reading must be activated more than 1 second)

Volage (Volts)	Input (IN 0-10 V)
0 to 1	Stop the heater (OFF)
1 to 2	Reset
2 to 4	Ventilation only
4 to 6	Low power
6 to 8	High power
8 to 10	Automatic (according to the outdoor sensor)

The unit can communicate the following informations via OUT signal 0-10V,

Voltage (Volts)	Output (OUT 0-10 V)
0 to 0.9	Stop the heater (OFF)
1 to 1.9	Ventilation only
2 to 2.9	Burner ON, fan OFF and minimum power
3 to 3.9	Burner ON, fan OFF and maximum power
4 to 4.9	Burner ON, fan ON and minimum power
5 to 5.9	Burner ON, fan ON and maximum power
6 to 6.9	Burner fault
7 to 7.9	Sensors fault
8 to 8.9	Overheating fault
9 to 9.9	Reset

5-COMBUSTION SETTINGS

Be careful, these interventions must be carried out by a qualified professional person

5.1 Changing gas

The gas heater units are equipped with atmospheric flared gas burners, which allow to use natural gases G20, G25 or even LPG.
The burner ports are designed to ensure a very good flame stability without separation nor return to the injectors.

The gas change must be realized in the following way :
1– Disconnect the electric supply connector and close the gas supply
2– Unscrew the fixing nut of the gas network (1.) on the gas valve and the three screws (2) which allow the injector ramp to be fixed on the burner block.
3 - Change the injectors (see the settings table).
4 - Screw the new injectors (3) replacing the sealing rings (4) and keeping an eye on the sealing, **the injectors must be assembled dry.**
5 - Reassemble the ramp and reconnect the gas network on the gas valve **by replacing the gasket,** careful during the reassembly don't forget, or damage, the sealing rings**.**
6 - **Control the sealing after the assembly.**

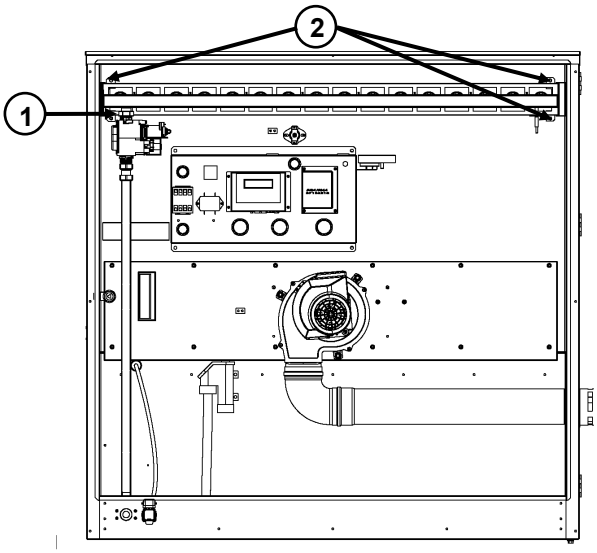

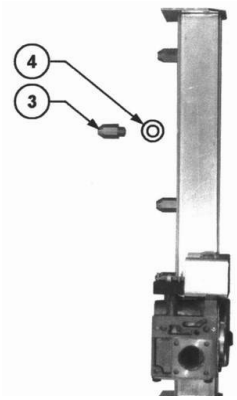

ATTENTION : Cette opération doit s'effectuer alimentations gaz et électrique coupées

5.2 Selection table for nozzles and gas pressure :

After reinstalling the gas ramp, adjust the gas pressure according to the table below.
The adjustment is performed while the burner is operating, using a pressure gauge to monitor the setting.

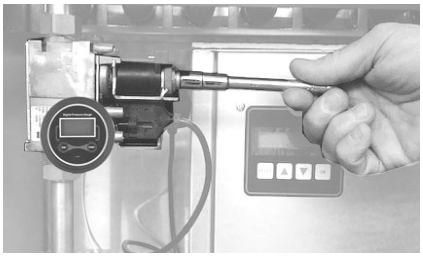

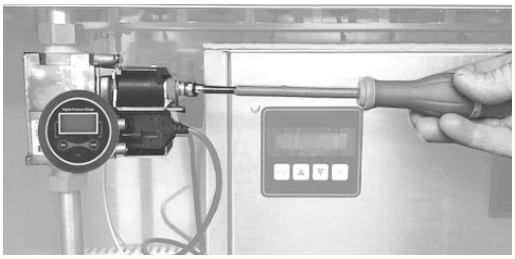

Types	Adjustment for G20 and G25					Adjustment G31		
	Gas nozzle	Gas pressure for G20		Gas pressure for G25		Gas nozzle	Gas pressure for G31	
		Mini power	Maxi power	Mini power	Maxi power		Mini power	Maxi power
ATLX55	10 x AL 2.20	4	8.5	5	11	10 x AL 1.50	7.5	16.5
ATLX85	16 x AL 2.20	4	8.5	5	11	16 x AL 1.50	7.5	16.5

CAUTION : After adjustment, always replace the protection screw and close the pressure port. Check for leaks after the adjustment.

For combustion settings, you can adjust the following :
1 - Pressure screw on the gas valve according to the type of gas and its stage (Min P. & Max P.)
2 - Air pressure settup on the heater control board (Max P. and Min P).

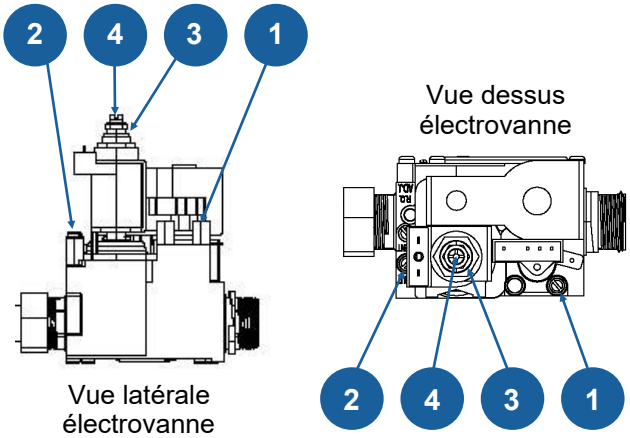

1) Gas pressure tap for gas valve inlet
2) Gas pressure tap for gas valve outlet
3) Setting screw Max P (Screw for more pressure)
4) Setting screw Min P (Screw for more pressure)

For pressure settings, connect the gas manometer on the gas pressure tap on the gas valve outlet (2)
Adjust the pressure on the adequate screw: Max P. (screw 3) and Min P. (screw 4)

Be careful to re-screw the screws of pressure tap

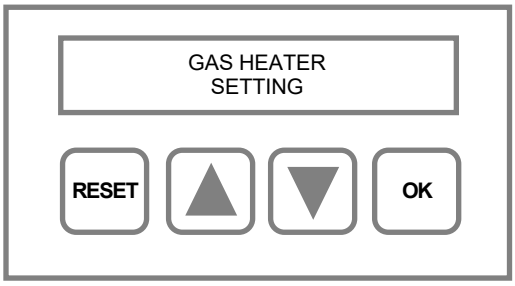

Once the burner starts (thanks to ambient thermostat or manual mode on control board), move on the display «Heater settings». Press 5 seconds on « OK » and go to the display « Air pressure Max P».

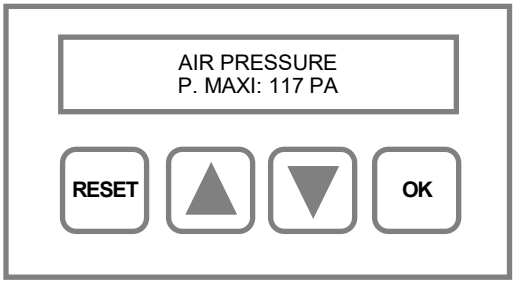

On the display « Air Pressure P. MAXI » press « OK ». The exhaust fan increases the speed to stabilize the air pressure to the displayed setpoint. After a P. max pressure check on the gas valve outlet, adjust the O2 and fumes values with ▼ and ▲ then validate on « OK » when the setting is correct.
The O2 value in maximum power = 5.5% (±1%)

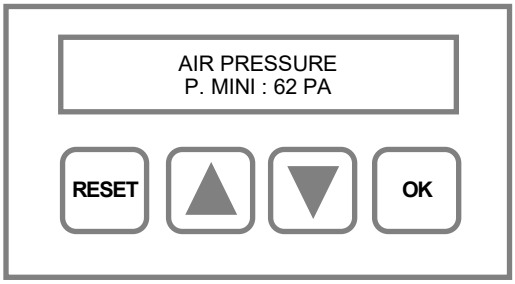

Move to the display «Air pressure P. MINI.» then press on « OK ». The exhaust fan reduces its speed to stabilize the air pressure to the displayed setpoint. After a Min P pressure check on the gas valve outlet, adjust the O2 and fumes values with ▼ et ▲ then validate on « OK » when the setting is correct.
The O2 value in minimum power = 7.5% (±1%).

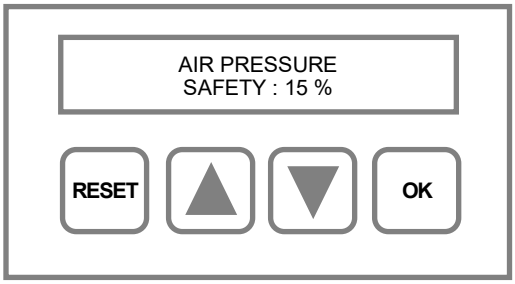

Move to the display «Air pressure safety» to define the minimum pressure which the control box must cut off because of air combustion lack. Press « OK » and adjust the value with ▼ and ▲ then validate on « OK ».
More the value is high more the cut off will be low.
If «Air pressure P. MINI» = 62 and «Air safety» = 15%
The air lack cut-off will be at 62-15 % = 53 Pa

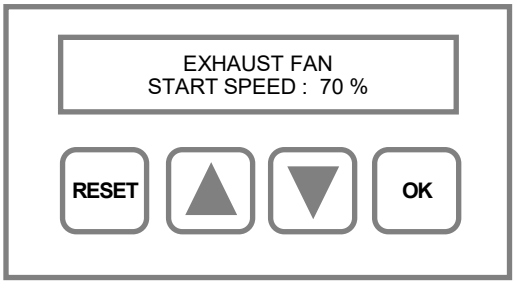

Move to the display «Exhaust fan start speed» to define the speed of the extractor/exhaust fan at the start up. The factory setting is 70 %. This value can be adjusted in precise cases, check with the manufacturer if necessary.

6-COMMISSIONING AND SETTINGS

6.1 Checks before commissioning

1- Before starting the commissioning and powering the device, check the following things :

- The connection of air combustion and fumes must be perfectly sealed.
- Ensure the perfect tightness of the gas circuit till the heater.
- The section of gas pipe line is correct according the gas type and pressure.
- The nature of gas and the pressure supplied according the heater settings.
- That the connection (gas and combustion air) are perfectly sealed
- That the protective film on panels is removed
- That the distances around the generator are respected
- That the fan door is locked and the electrical fan plug is properly connected

2- Check the electricity supply, between 210V et 230V.

Be careful with the phase-neutral polarity. In case of reversal, the mistake is displayed on the control board of the heater. (in that case, reverse blue and brown wires on the power supply.
If the neutral is impedance earthed (more than 20 volts between neutral and ground), provide a non-polarized control panel or a isolating transformer on the heater.

3– Check that the type of gas and the pressure supply match with the heater.
The maximum inlet pressure from gas valve cannot exceed 50 mbar. Refer to the chapter « GAS CONNECTION ».

6.2 Commissioning

The first commissioning must be realized by a qualified technician.
To commission the heater, raise the set point temperature of the ambient thermostat.
The heaters are setup and tested in factory. They do not required any adjustment for altitudes located between the sea level and 500 meters. It is still necessary to realize combustion analysis at the commissioning.

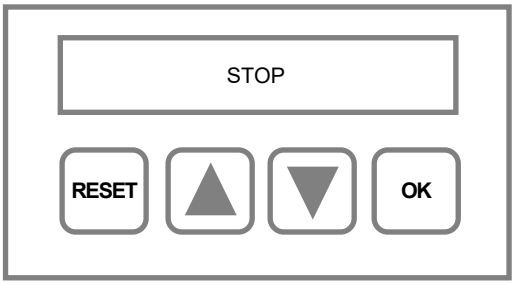

When the heater is power up, the display shows the heater state.
The messages are the following:

STOP
VENTILATION
PRE-VENTILATION
BURNER ON - MNI POWER
BURNER ON - MAXI POWER
ERROR XXX
In case of default, refer to the chapter « Troubleshooting »

6.3 Control board use

The gas heaters are equipped with a control board allowing to control the state of the units and configure them.

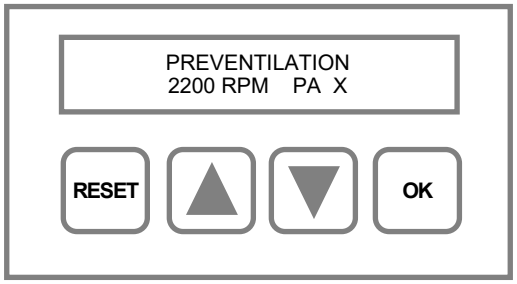

The display shows that the burner is on pre-ventilation.
The second line indicates the speed of the extractor/exhaust fan and PA the state of the air pressure switch.

PS must displays « X » when the extractor is OFF and « OK » the pressure switch detects airflow.

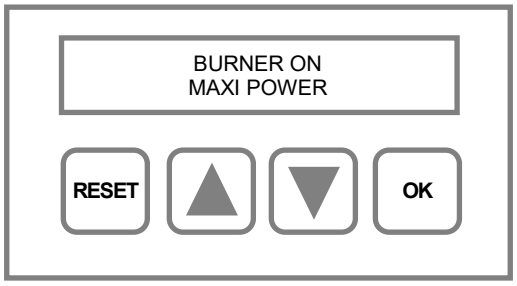

When the burner lights up, the display shows that the burner is "ON" and if the power is MAXI or MINI.

To change the display, press ▲

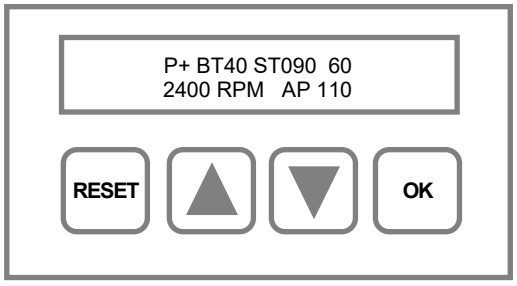

The display shows 6 information allowing the diagnostic :

1 - Burner state : P+ = Maxi power or P- =Mini power
2 - The blowing temperature BT in °C = 40 (example)
3 - The fumes/smoke temperature ST in °C = 90 (example)
4 - The value in % of exhaust fan PWM = 60 (example)
5 - The speed of exhaust fan in RPM = 2400 (example)
6 - The air depression of exhaust fan in PA = 110 (example)

To change the display, press ▲

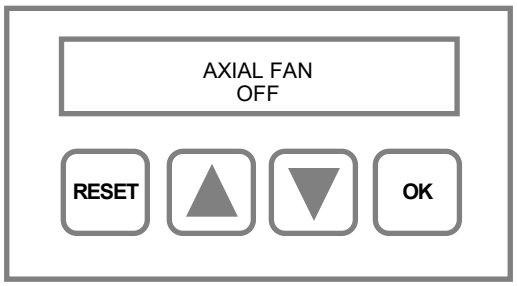

The display shows the axial fan state (OFF or ON). The fan operation is operated in two simultaneous ways:
- According to a starting blowing temperature setup in factory at 45 °C.
- According a temporization when burner starts whatever the blowing temperature.
When burner stops, only the temperature can maintain or restart the fan if its value is higher that set point temperature (for setup, refer to the chapter « control board setup »)

To change the display, press ▲

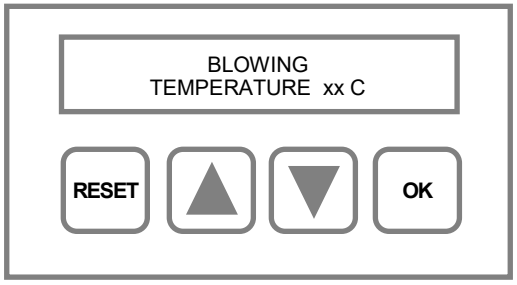

The display shows the average blowing temperature.

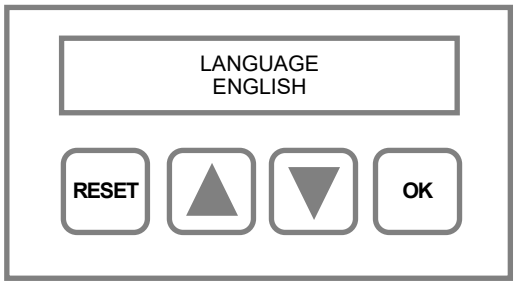

The display shows the language of the display.

Several languages are available such as :
Français, English, Deutsche , Espanol.

To change the language, press 3 seconds « OK », select the new language with ▼ and ▲ then validate with « OK ».

To change the display, press ▲

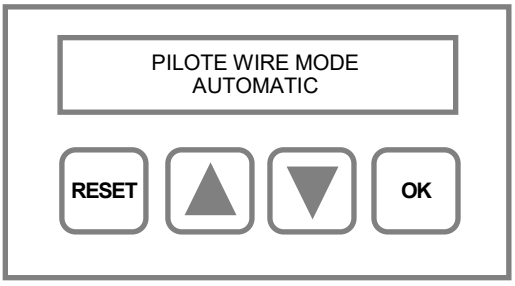

The display shows the working mode of the heater.
For tests or checks, it is possible to simulate the functions : ON, OFF, ventilation of the ambient thermostat, without acting on thermostat. To select the mode, press 3 seconds on « OK » then move with ▼ and ▲ then validate on « OK ». The system will go back to the automatic mode after 5 minutes if the manual mode is not used.

To change the display, press ▲

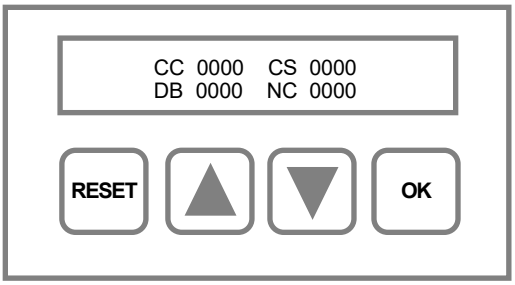

The control board diagnose the latest events on the heater:

CC - Number of Short cycles (Commissioning < to 3 minutes)
CS - Number of power failures
DB - Number of burner defaults
NC - Number of ignition cycles

To change the display, press ▲

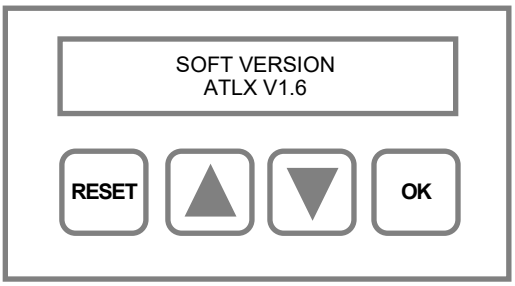

The display shows the version of the software used.

To change the display, press ▲

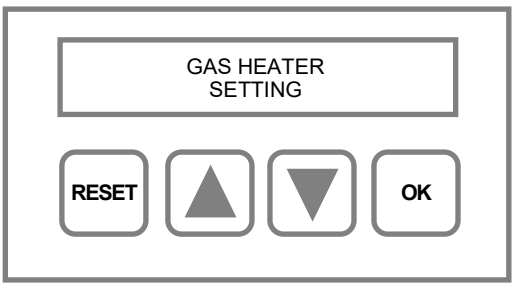

The displays allows gas heater settings. This part of the program is strictly reserved to qualified person, trained to the product specifications and qualified in gas combustion. For any settings, refer to the chapter « Control board settings »

6.4 Control board settings

The following settings must be realised by a qualified person, trained to the product specifications.
Be careful, if you change the factory settings may lead to a malfunction.

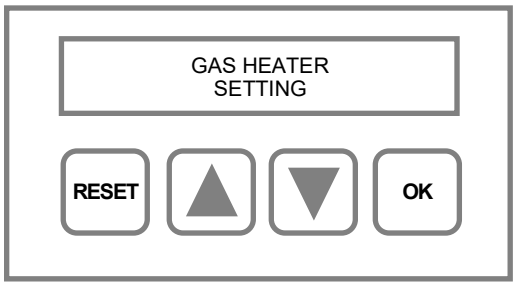

From the display « Gas heater setting», press 5 seconds on « OK » to access to the different settings screens.

To change the display, press ▲

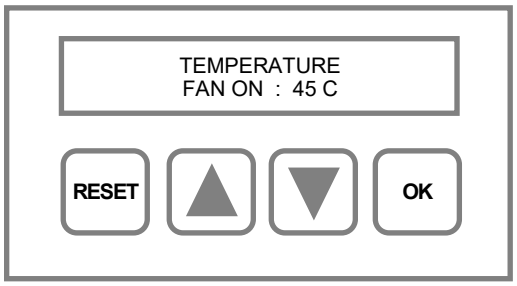

The display shows the temperature when fan starts. Press « OK » and adjust the requested set point value with ▼ and ▲ and press « OK ». The factory setting value is 45 °C.
From 45 °C the axial fan starts and stops when the blowing temperature will be lower to the setting –3°C (ON 45 °C / OFF 42 °C for factory settings).

To change the display, press ▲

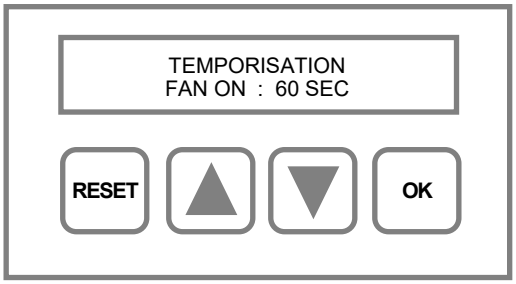

The display shows the delay time when the fan starts. Press « OK » and adjust the requested set point value with ▼ and ▲ and press « OK ». The factory setting value is 60 seconds. The axial fan starts 60 seconds after the burner ignites and stops when the burner stops except if the blowing temperature is over the set value : Temperature FAN ON (previous setting).

To change the display, press ▲

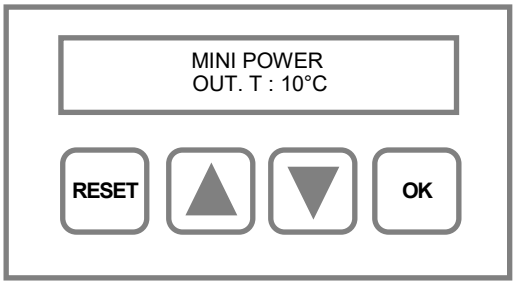

The display shows the switch from maximum power to minimum power according to the outside temperature. Press « OK » and adjust the temperature setpoint value with ▼ et ▲ then validate with « OK ». The factory setting value is 10°C. The burner goes to minimum power (P MINI) when the outside temperature is over the setting value and to maximum power when the outside temperature is lower than the setting value.

To change the display, press ▲

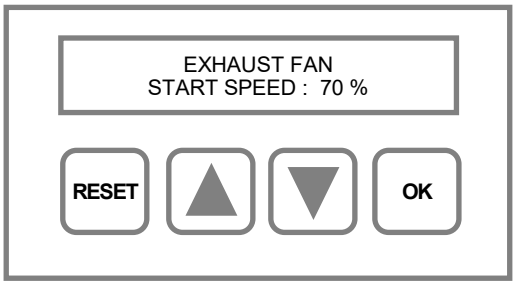

Move to the display «Exhaust fan start speed» to define the speed of the extractor/exhaust fan at the start up. The factory setting is 70 %. This value can be adjusted in precise cases, check with the manufacturer if necessary.

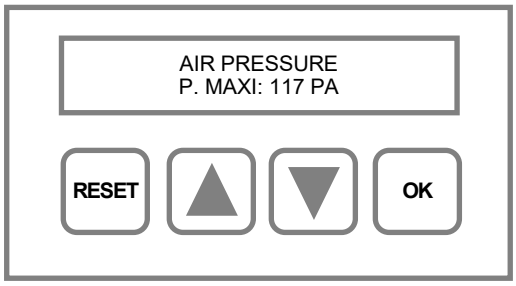

The display indicates the air pressure at maximum power. For the adjustment of this menu, see the chapter "Combustion Setting".

To change the display, press ▲

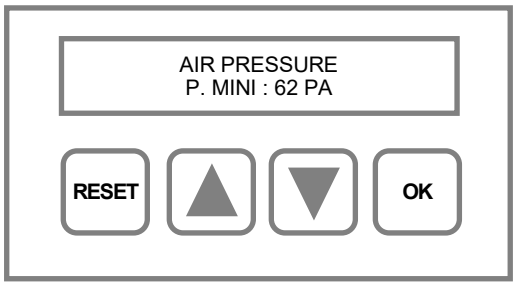

The display indicates the air pressure at minimum power. For the adjustment of this menu, see the chapter "Combustion setting".

To change the display, press ▲

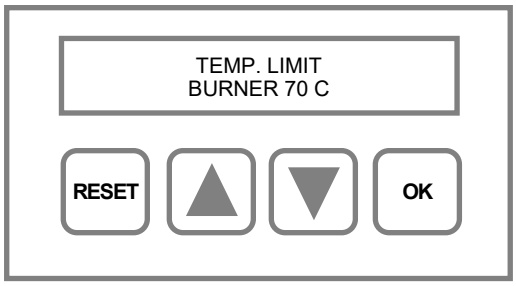

The display indicates the burner's safety limit temperature. This factory setting must not be modified without the manufacturer's approval. Factory setting: 70°C. The operating range is between 60 and 80°C.

To change the display, press ▲

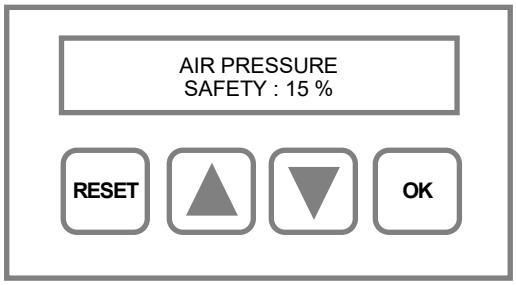

The display indicates the air pressure safety.
For the adjustment of this menu, see the chapter "Combustion setting".

To change the display, press ▲

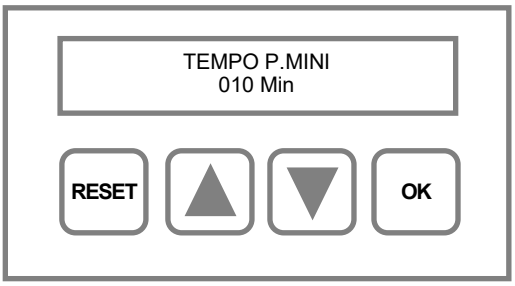

The display indicates the delay time to switch from minimum power to maximum power. Press "OK" and adjust the time value using ▼ and ▲, then confirm with "OK".
The factory setting is 10 minutes. The operating range is between 10 and 30 minutes. If the set value is 10 minutes and the device operates at low power for a duration exceeding this value, it will switch to high power.

8– FLUE PIPE CONNECTION

8-1 Generalities

During the commissioning and the maintenance, make sure that:
- Combustion air intake and smoke exhaust are not obstructed.
- Seals are not damaged during the installation of the flue pipes, between them or on the unit. Ensure the tightness.
- There is no water which can come inside the unit by the flue pipes (electrical hazard). For this, use: drain tee, condensate drain pan,…
-For big extension and concentric installation, it is necessary to foresee a condensate drain pan.

8-2 Single flue kit connection

The combustion air is taken directly into the room and the smoke exhaust is done to the exterior thanks to a single flue through the roof. The fumes must be evacuated outside the heated room.

Roof type B22 Vertical

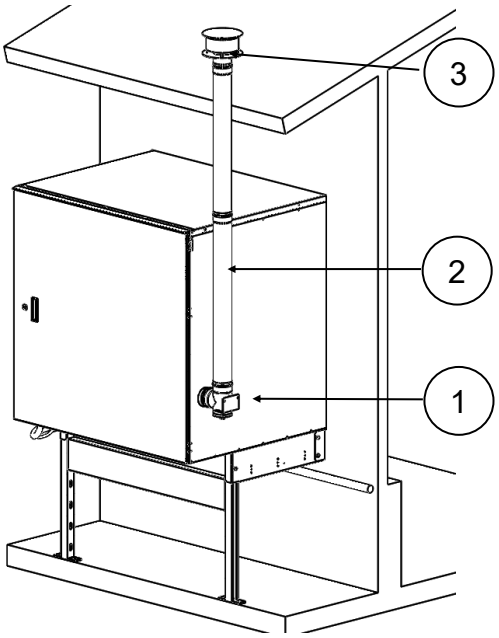

Mounting type :

Flue pipe diameter Ø80mm:

- Tee with airtight (1) at the beginning,
- Single extension of 1 m (2),
- Roof terminal (3)

The roof terminal must be minimum at the same height of the roof ridge.

B22 Horizontal

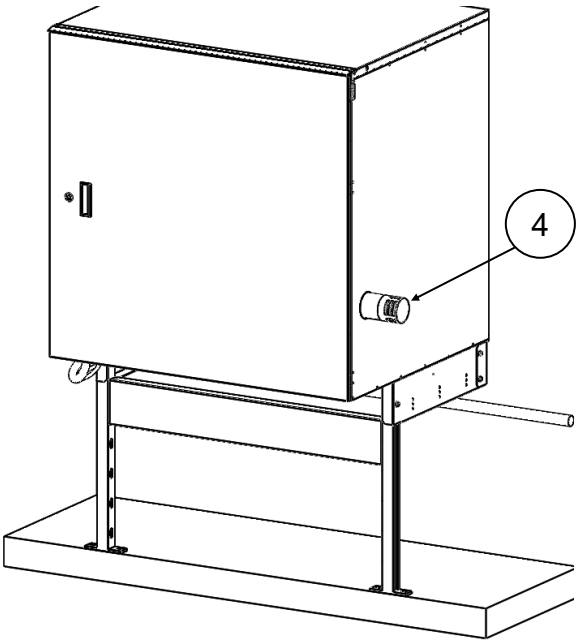

Montage type :

Flue pipe diameter Ø80mm:

- Airtight terminal (1),

The horizontal evacuation must have an incline of 3° down to prevent any condensate to return to the fumes extractor.

ATTENTION

The section of flue must be at least equal to the diameter of the heater outlet.
The smoke exhaust cannot be vertical or at 45° minimum.
The total length of the connection cannot exceed 4 m, knowing that : elbow 90° or 45° = 1 m of flue.
If the outside part of the flue is higher than 2 m, foresee an insulated pipe.
The evacuation must be outside for a good fumes evacuation.
Do not confine the evacuations, under a lean-to per example, risk of re-fume extraction from the device.
Make sure that the fumes are not reintroduced in the heated room, provide enough space regarding the ventilation hatches of the heated room.

9– GAS CONNECTION

9.1 Generalities

First of all it is necessary to check that the device is in conformity with the type of gas distributed. For this purpose, you must refer to the indications shown on the identification plate.
The gas supply must be appropriated to the power of the heater and be equipped with all the security and inspection devices required by current standards.
A precise study must be carried out on the diameters of the piping depending on the type and the flow of gas and the length of the piping. It is necessary to make sure that pressure drops in the piping do not exceed 5 % of the supply pressure.
The gas connections must be made in conformity with the recommendations for indoor installations whatever the type of gas, by qualified personnel holder of necessary approvals.

In case of LPG use, be careful with the evaporation capacity of the tank!
The evaporation capacity is linked to the dimension of the tank, to the pressure and to the outside temperature. The lower is the temperature and the starting pressure is high, the less is the evaporation capacity. So it means that the tank must be oversized regarding the real consumption needs.

Installation example : 3 heaters of 80 kW = 6.3 kg/h x 3 = 19 kg/h

- Gas pressure at 1.5 bar with outside temperature at -10°C : 10 tons tank for correct gas flow.
- Gas pressure at 500 mbar with outside temperature at -10°C : 3 tons tank is enough.

Check the tightness of gas fittings after each maintenance operation

9-2 Connection

The gas connection is made on male gas connection 3/4, located under the door of the device on the left side. Make sure that the passage for gas is clean and non obstructed (leaves, cobweb, soil, etc.)

Gas connection type :

A- Under 50 mbar natural gas supply (shut off valve + gas filter)
B- Over 50 mbar natural gas supply (shut off valve + gas filter + gas pressure regulators)
C- LPG supply (shut off valve + gas filter + gas pressure regulators)

Gas connection kit*

To get more details, refer to the notice of the kit.

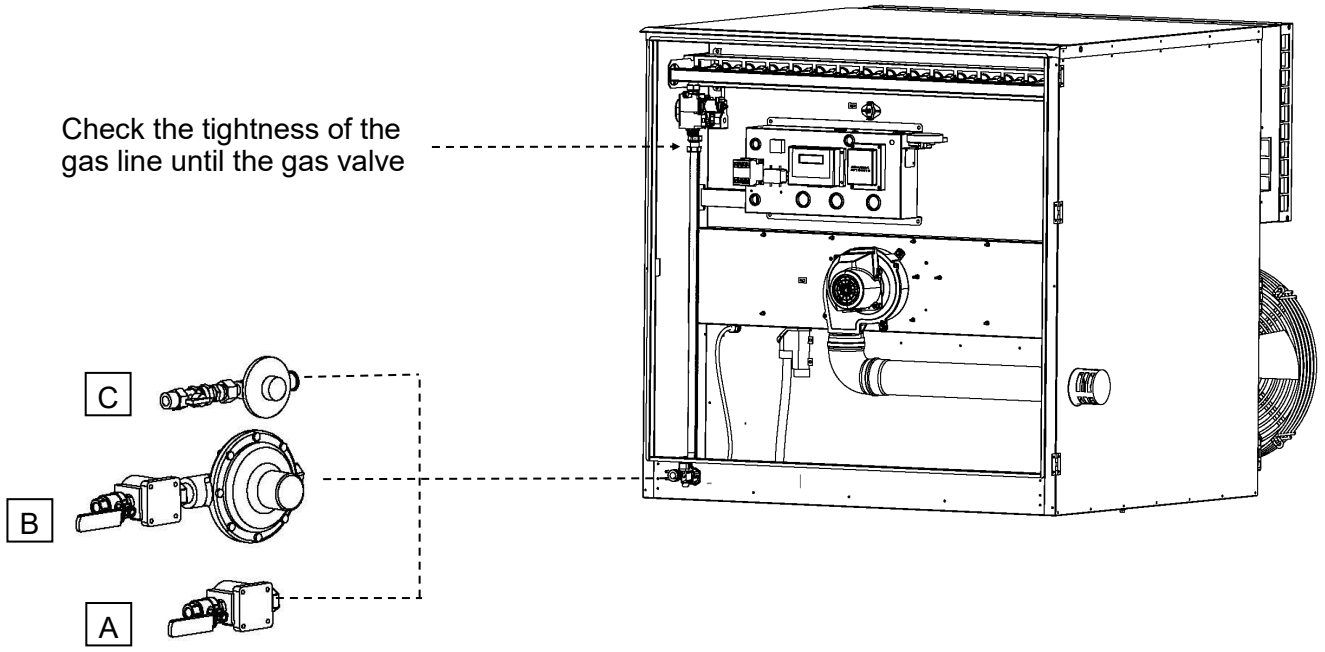

10- BILL OF MATERIALS

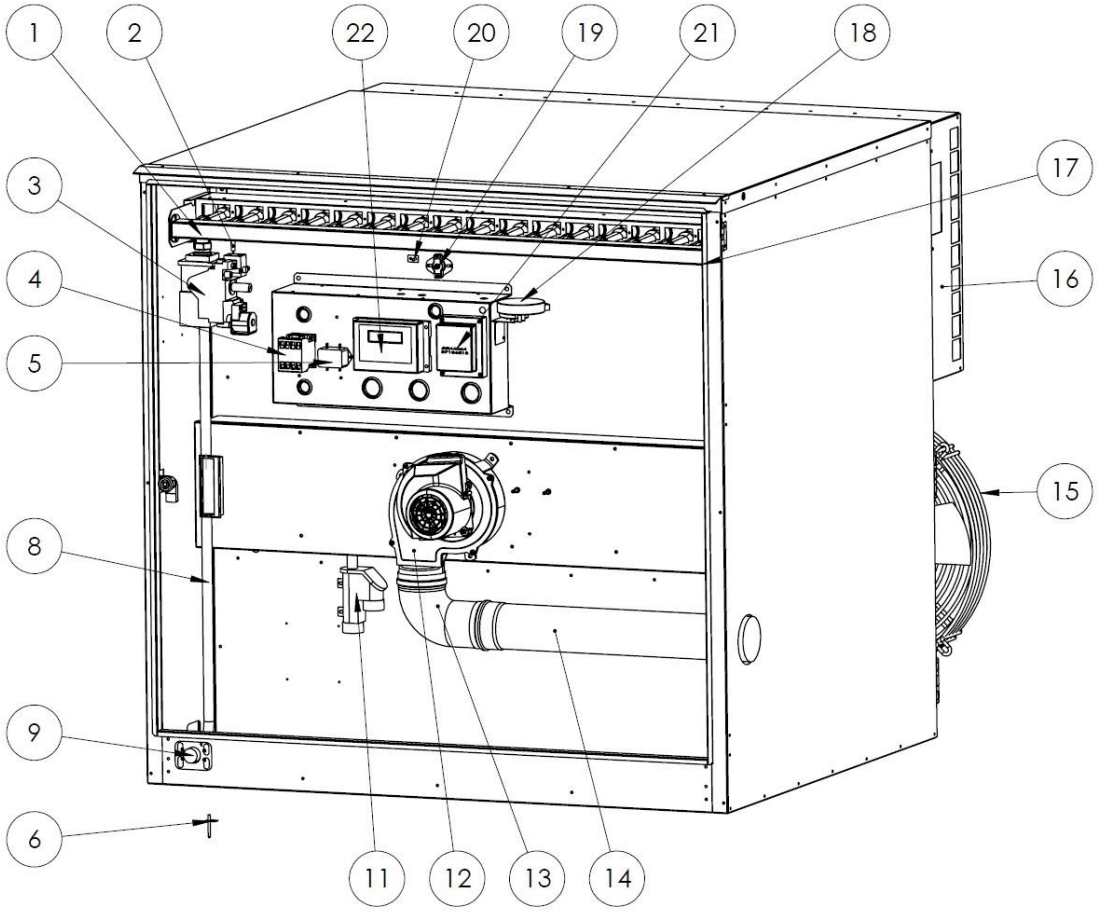

No.	Description	ATLX55	ATLX85
1	Gas ramp	Consult us	Consult us
2	Ignition electrode + cable	ATE021+ARXE020	ATE021+ARXE020
3	2-stages solenoid gas valve	GAZ0014	GAZ0014
4	Contactor 4P 230V-16A	ELE0313	ELE0313
5	Filter	ARXE522	ARXE522
6	Outdoor temperature sensor	UTC0625ATLX	UTC0625ATLX
8	Copper gas line	GAS0122	GAS0122
9	Gas connexion	-	-
11	Siphon	UTC0448	UTC0448
12	Exhaust fan	ATE0101	ATE0101
13	Elbow 90° Ø80 ALU	CE8090	CE8090
14	Sealed tube Ø80 mm	LE80050	LE80065
15	Axial fan	1x ATE804S	2x ATE804S
16	Diffuser with profiled louvers	SEDIFATLX55	SEDIFATLX85
17	Ionization sensor + cable	ATE022 + ARXE023	ATE022 + ARXE023
18	Air pressure sensor	ATE463ATLX	ATE463ATLX
19	Safety thermostat with manual reset	THE147	THE147
20	Temperature sensor of heat exchanger	HB0087	HB0087
21	Safety control box	ARX531	ARX531
22	Control board	KARXE521ATLX	KARXE521ATLX

11-MAINTENANCE

Correct and regular use and maintenance of the unit heater allows an efficient operation, a minimum consumption, as well as a long life.

These interventions must be realised by a qualified person.
THE MAINTENANCE MUST BE DONE WITH THE DEVICE COLD, WITH THE GAS AND ELECTRICITY SUPPLIES CUT OFF.

The heaters used for poultry houses must be cleaned and maintained more frequently.
It is necessary to clean the device each time a change is made to a new batch! It is also required to check the combustion at least twice a year.

Check the proper functioning of all safety devices and check that all screws are correctly tightened.

Heat exchanger, smoke extractor and venturi :
To access to the heat exchanger, dismount the smoke box and the burner. Inspect the state of the tubes inside, and if it necessary, clean and sweep it. If the heater is equipped with smoke baffles, check their state before reassembling them, if it is necessary replace them.
Make sure to replace all damaged seals during this operation. Clean the exhaust fan and the venturi with a soft cloth and/or compressed air.

Gas burner:
Dismantle the burner, check the burner ramp state and the nozzles and clean it.
Check the state of the ionization sensor and ignition electrode, their position in relation the burner ramp and change them if it is necessary.

Gas filter :
Dismantle the dirty cartridge and clean it with compressed air.

Flue pipe :
Dismantle the pipe, sweep it and check leaks.

Blowing fan:
Before cleaning the device, disconnect the “Harting” electrical plug of the fan(s) before opening the door. If it is needed, it is possible to remove completely the door to avoid any water projection when you clean the heat exchanger or the farm. Clean the fan(s) **with compressed air, never use a high-pressure jet of water**.

Body and grilles :
Clean it using a duster.

Outside of the heat exchanger:
The heat exchanger can resist to a high pressure cleaner and can be cleaned with clean water, **without addictive**. **After cleaning, make sure to dry properly the device** to avoid stagnant water, that can create an oxidation in reaction with volatile compounds into the farm.
The grill can be remove to facilitate the access to the exchanger and clean it. Make sure to do not spray the exchanger from the front, keep the head of high pressure jet on the side to allow a good angle to clean the heat exchanger. The water will flow towards the lower access door.
Be careful, during the cleaning, do not spray through the crimping base of the exchanger, there is a risk of infiltration into the combustion circuit.

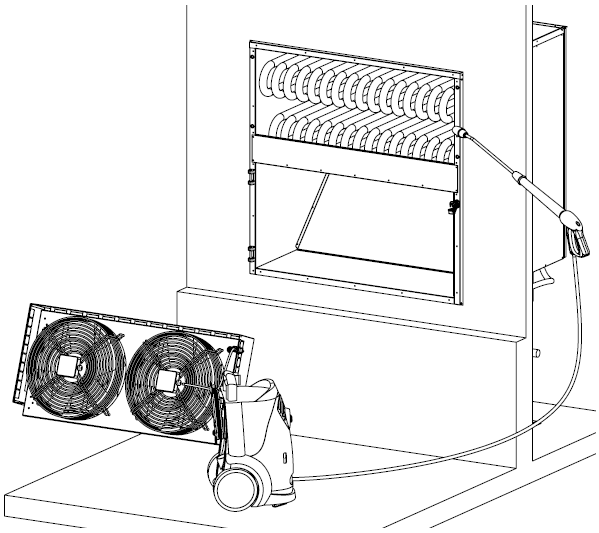

CAUTION:
Do not clean the burner compartment or the fan(s) with high-pressure jet of water!
Do not get wet the electrical parts, ELECTRICAL HASARD !
Do not spray through the fan(s).
Do not spray directly on temperature sensors

7– TROUBLESHOUTING

WARNING : The power supply and gas supply must be cut before any intervention on the heater.

List of defaults and solutions:

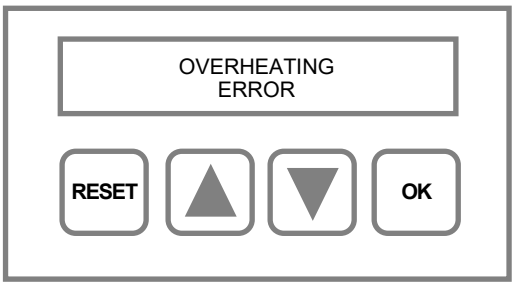

The display shows that the safety thermostat with manual reset is in default. Press the button of the thermostat.

The error can come from a power failure whereas the heater was operating or because of a fan short-circuit. The default can also come from a faulty components: fan condenser, thermostat with manual reset, control board.

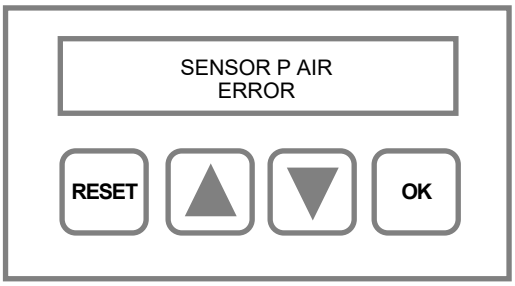

The display shows that the differential pressure sensor is disconnected or defective.

Check the connection or replace the pressure sensor.

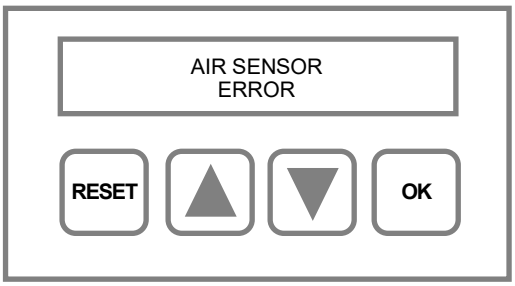

The display shows that the blowing air temperature sensor is disconnected or defective.

Check the connection or replace the air temperature sensor.

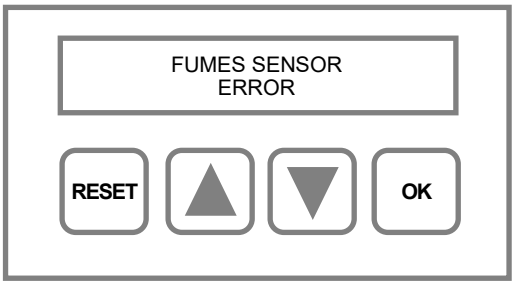

The display shows that the fumes sensor is disconnected or defective.

Check the connection or replace the fumes sensor located under the exhaust fan.

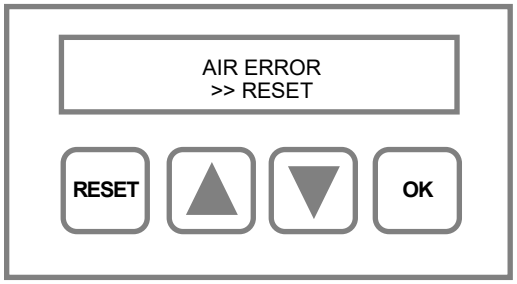

The display shows a lack of air.

This error can appear if the tubes of pressure switch are disconnected or obstructed or if the connection of air combustion or fumes is obstructed. The error can also appear if the exhaust fan or differential pressure sensor is defective.

To reset the error, press RESET

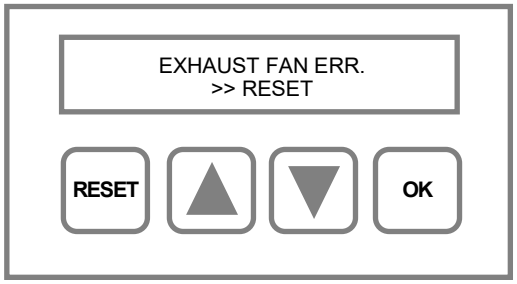

The display shows that the extractor does not work or is disconnected.

Check the connection of the cable or check the good rotation when the exhaust fan starts. If the exhaust fan does not rotate, replace it.

To reset the error, press RESET

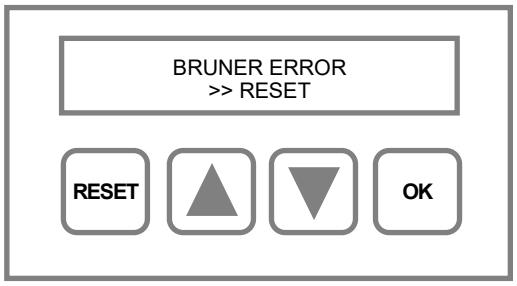

The display shows a default on the burner control device which is located on the rear side of the control board plate.
The error can be linked to different problems.

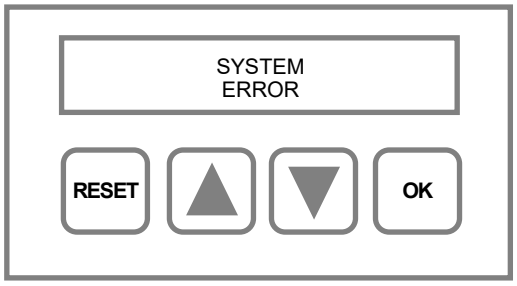

The display shows a system default on the control board.

Replace and configure the new control board.

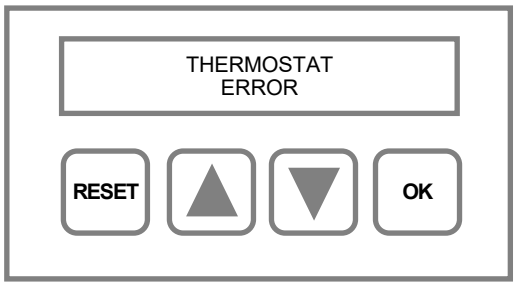

The display shows a default with the thermostat.

This error can appear if the electrical cable between the heater and the thermostat is too long or it can come from an interfering current from others electrical cables.

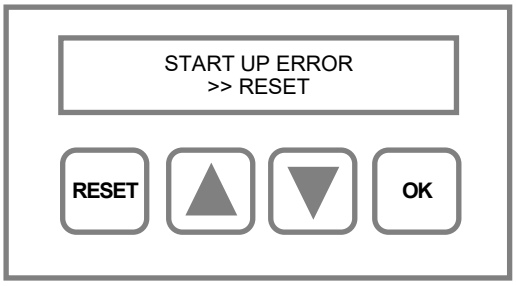

The display shows that the heater cannot start up.
It means that the unit tried 3 times to ignite without success.

This error can come from gas supply issue.
Check the gas pressure.

To reset the error, press RESET

In case of problems, make sure that the conditions required prior to operating the heater are present.
If the control box is in the safety position (with the burner defect indicator lamp lighted up), reset it.

CAUTION : All electrical or mechanical operations must be carried out when the electrical supply is cut off and the gas supply is closed.

7.2 Summary table of factory settings :

Settings list	Factory values
Air pressure at maximum Power	117 PA
Air pressure at minimum Power	62 PA
Air pressure safety	15%
Exhaust fan start speed	70%
Temperature blowing fan on	45°C
Delay blowing fan on	60 secondes
Outside temperature switch from minimum to maximum power	10°C
Delay to switch from minimum power to maximum power	10 min

7.3 Resume of defaults and diagnostics :

Defaults	Causes	Things to do
The device does not start	- Incorrect wiring - Lack of voltage - Wrong connections - The ambient thermostat is not triggered, or no 0-10V signal - The pilot wire receptor is not on automatic position - Overheat safety thermostat is triggered.	- Check the wiring - Verify the electrical supply - Control the connections - Increase the setting point of the ambient thermostat - Reset the thermostat
The burner preventilates continuously	- Extractor out of services - Air pressure switch disconnected - Air pressure switch out of services - Pressure air pipes cluttered	- Replace the extractor - Reconnect the pressure air pipes - Check and/or replace the air pressure switch
The ignition electrode is sparking, the burner ignites, the control box turns on safety position (the burner default lights)	- Gas valve defective - Control box defective -Ionization sensor incorrectly adjusted or defective - Air in the piping - no gas	- Replace it - Replace it - Adjust it or replace it - Bleed the piping - Check the pressure
The unit is on safety position (red led switched on)	- Gas supply interrupted	- Reset by pressing the red button on the control box
The device does not heat sufficiently	- Incorrect placing of the thermostat - Incorrect adjustment of the thermostat - Insufficient gas pressure - Injectors are unsuitable	- Change its location - Adjust the thermostat - Check the gas supply pressure - Check that the injectors are correctly selected and replace them if necessary
The device never stops	- Thermostat is set too high or is defective - Incorrect wiring	- Lower the setting point or replace it - Check the wiring

13- RECOMMENDATIONS FOR USER

Precaution to be respected :

- Never obstruct the smoke exhaust system and the fresh air intake.
- Never make any modifications to the adjustments which have been carried out by the qualified professional person.
- Never spray any water into the gas heater
- Warn the after-sales technician when there is a change of gas, gas pressure or a modification of the power supply voltage.

You are strongly recommended to take out a maintenance contract: "see with your installer".

What should be done in case of problems?

PROBLEMS	REMEDIES
Smell of gas	***- Close the external gas valve and the electricity supply then warn the maintenance technician.***
The burner stays in safety position *(burner defect led is lighted)*	***- Press the reset button of the burner located on thermostat control box.*** ***- If the problem persists, contact the after sales technician.***

1 Avenue de l'Epinette
77100 MEAUX
www.yahtec.com